Bixby Energy

Installation, Operating and
Maintenance Instructions

UBB™ Multi-Fuel Stove

WARNING! PLEASE READ THIS ENTIRE MANUAL BEFORE INSTALLATION AND USE OF THE BIXBY UBB MULTI-FUEL STOVE. FAILURE TO FOLLOW THESE INSTRUCTIONS COULD RESULT IN PROPERTY DAMAGE, BODILY INJURY OR EVEN DEATH. CONTACT LOCAL BUILDING OFFICIALS, FIRE OFFICIALS OR THE AUTHORITY HAVING JURISDICTION ABOUT RESTRICTIONS, PERMITS AND INSTALLATION INSPECTION REQUIREMENTS IN YOUR AREA.

Save these instructions for future reference.

PLEASE RECORD THE FOLLOWING INFORMATION:

MODEL	_____	DEALERSHIP	_____	INSTALLER	_____
DATE PURCHASED	_____	DEALER PHONE	_____	INSTALLER PHONE	_____

SERIAL NUMBER _____

Bixby Energy
www.bixbyenergy.com

TABLE OF CONTENTS

Safety Information 3
- Minimum Clearances to Combustible Materials

Specifications 5
- Mobile Home Installation

Planning the Installation 7
- Performing the Installation
- Optional Thermostat Operation
- Leveling the UBB

Venting Installation and Instructions 10
- Venting Components
- Vent Location
- Location of Exhaust
- General Vent Installation Instructions

Operating Instructions 20
- Fuel
- Start Up
- Control Board Trim Pot Panel
- Fine Tuning the UBB
- Flashing Indicator Light System

Maintenance and Cleaning Procedures 26
- Fire Pot/Burner
- Ash Drawer
- Heat Exchanger Tubes (weekly)
- Soot and Fly-ash Formation and Need for Removal (yearly)
- Exhaust Fan (yearly)
- Cleaning the Exhaust Manifold (monthly)
- Fuel Hopper (monthly)
- Cleaning the Glass (as needed)
- Cleaning the Feeder Tube (monthly)
- Cleaning the Lower Paddle (monthly)
- Cleaning the Air Filter for the Ignition Air Compressor (yearly)
- Replacing the UBB Air Filter (2-3 months)

Flashing Indicator Light System 31

Troubleshooting Procedures 32

Service Parts List 36

Optional Accessories 37

Wiring Diagram 38

Venting Parts List 39

Maintenance Log 40

SAFETY INFORMATION

1. Install and use only in accordance with these installation and operating instructions, beginning page 10. Contact local building officials, fire officials, or the authority having jurisdiction about restrictions, permits, and inspection requirements in your area.
2. Refer to instructions and local codes for precautions required for passing the vent pipe through a combustible wall or ceiling. Inspect and clean vent system frequently in accordance with manufacturer's instructions.
3. DO NOT INSTALL A FLUE DAMPER IN THE EXHAUST VENTING SYSTEM OF THIS UNIT.
4. DO NOT CONNECT THIS UNIT TO A CHIMNEY SERVING ANOTHER APPLIANCE.
5. INSTALL VENT AT CLEARANCES SPECIFIED IN THE VENTING SECTION.
6. For use with only whole corn kernels, wood pellet fuel or approved pelletized biomass.
7. DO NOT BURN GARBAGE, OR FLAMMABLE FLUIDS SUCH AS GASOLINE, NAPHTHA OR ENGINE OIL IN YOUR BIXBY UBB. Store any fuel away from your UBB.
8. Always unplug the UBB before cleaning or servicing.
9. Dispose of all ashes in a metal container.
10. The use of a protective screen (e.g. fireplace screen) is recommended when children or animals are present. See your Bixby dealer for options.
11. DO NOT INSTALL IN A SLEEPING ROOM.
12. The door must be closed and latched during operation. Always allow the UBB to cool before opening the door to clean the firebox and/or the glass. If door must be opened during operation, use caution as embers may escape from combustion chamber.

WARNING: **BIOMASS (I.E. CORN, WOOD) IS A SOLID MATERIAL AND BY ITS VERY NATURE WILL ACCUMULATE ASH THAT MUST BE CLEANED OUT OF THE UBB AND VENTING ON A REGULAR BASIS. SEE CLEANING AND MAINTENANCE SCHEDULE. FAILURE TO DO SO MAY VOID WARRANTY.**

NOTE: It is recommended that a carbon monoxide detector be installed to ensure protection from the hazards of carbon monoxide. It is also recommended that a smoke detector be installed for early warning in case of fire.

CAUTION:

FRONT SURFACES OF THE BIXBY UBB WILL BE HOT WHEN THE UNIT IS IN OPERATION. DO NOT TOUCH, AND KEEP CHILDREN AND CLOTHING AWAY. CONTACT MAY CAUSE SEVERE BURNS. KEEP FURNISHINGS AND OTHER COMBUSTIBLE MATERIALS AT LEAST 2 FT. (610 MM) DISTANCE AWAY FROM THE BIXBY UBB.

MINIMUM CLEARANCES TO COMBUSTIBLE MATERIALS

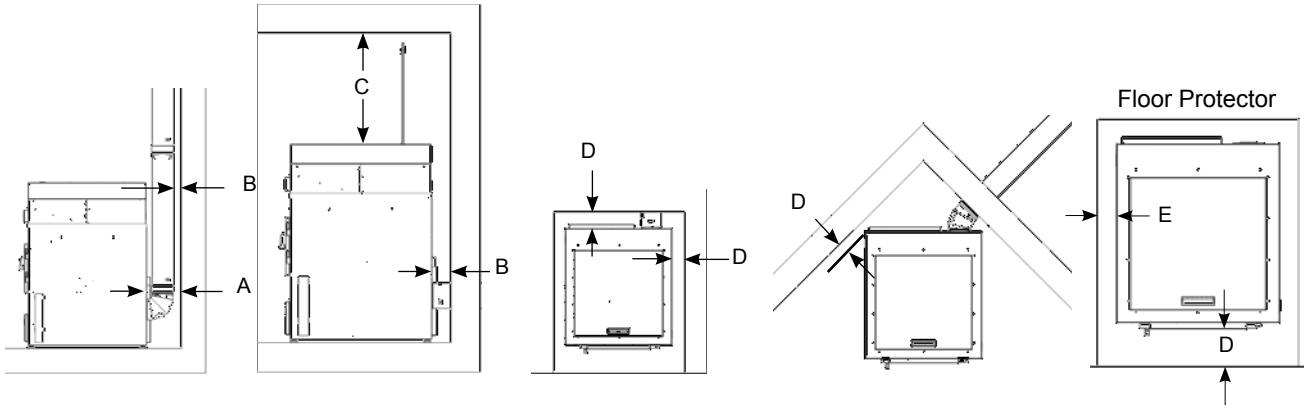

Freestanding and Alcove (rear only) Installation Clearances:

A	10.5″	(267mm)	D	6″	(150mm)
B	2″	(50mm)	E	3″	(75mm)
C	22″	(560mm)			

NOTE: Minimum clearances are for temperature concerns and do not allow for enough room for maintenance. Please allow enough room on the sides for routine maintenance, 6″ - 12″ (150mm - 305mm) of clearance to non-movable objects (i.e. walls) is recommended. Also, clearance to the back of the UBB is needed for replacement of the filter.

Use a non-combustible floor protector under the unit, extending 6″ (150mm) past the side of unit (or less if installed at closer clearances) and 6″ (150mm) in front of UBB door.

Alcove Dimensions (Rear Vent Only):
- Minimum Height - 62″ (1575mm),
- Minimum Width - 35.5″ (902mm),
- Maximum Depth - 24″ (610mm)

SPECIFICATIONS

Fuel:

Corn:

- Dry shelled corn, 16% moisture or less. Corn that is greater than 16% can generate mold in the hopper and increase issues with condensation in the vent system
- DO NOT use "cracked corn" or seed corn.
- Due to a wide variety of hybrids, a sample from your intended corn supplier should be tested before purchasing a substantial amount. Most varieties will burn in your UBB, however, Bixby Energy has found some varieties where the physical and chemical properties make it difficult to burn in corn stoves.
- The use of lower quality corn with foreign material (cobs, stones, or other material) may cause feed issues. Before loading the corn into the hopper, remove as much foreign material as possible.

Wood:

- Premium wood pellets made for pellet stoves sized ¼ inch diameter x 1 ¼ inch long are acceptable.
- High-grade wood pellets may be used, but the frequency of cleaning the stove and venting components will need to be increased.

Biomass:

- Pelletized biomass fuel sized ¼ inch diameter with a max length of 1 ¼ inch

CAUTION: USE OF UNSUITABLE FUEL MAY HARM THE BIXBY UBB AND COULD VOID ITS WARRANTY.

Heating Area: Varies depending on floor plan, heat loss, geographic location, altitude, UBB venting configuration, moisture content of fuel, and climate.

Installation: Install in accordance with this instruction manual and local building codes.

Shipping Weight: 400 pounds (181 kg)

Electrical: 120 VAC, 60 Hz., 15 amp service required, grounded, dedicated line recommended
Start: 11 Amps
Run: 2 Amps

Dimensions: Height = 40.5 in (1029 mm)
Width = 26.5 in (673 mm)
Depth = 30 in (762 mm)

Fuel Hopper Capacity: 6.5 cu. ft. (approx. 5.2 Bu / 300 lbs shelled corn)
- optional 2.5 cu. ft. (approx 2 Bu / 110 lbs corn) hopper extensions are available from your Bixby dealer.

Listing: The Bixby UBB Multi-Fuel stove was tested by OMNI-Test Laboratories, Beaverton, Oregon to ASTM E1509 and ULC C1482 (report number 223-S-08-2). Emission tests were also conducted per the USA Environmental Protection Agency test methods 28A and 5G for particulate emissions. The UBB is exempt under 40 CFR 60.531, therefore the results have not been submitted to the EPA.

IMPORTANT:
Proper material handling equipment must be available to safely transport and position the Bixby UBB.

1. The UBB is attached to the pallet with two bolts. Remove the side panels to gain access to the bolts. Remove the protective packaging, using appropriate tools, and detach the unit from its shipping pallet.
2. Using a suitable transporting device, move the unit to the desired location, centering it on the Bixby Hearth Pad or an alternate protective plate. Care should be taken not to mar the Hearth Pad. Placing protective material under the Bixby UBB when positioning is recommended.
3. Use the included bulls-eye level to level the unit by adjusting the height of its legs. Leveling the unit is required to maintain even fuel distribution. See Page 9 for more information.

MOBILE HOME INSTALLATION

WARNING: DO NOT INSTALL IN A SLEEPING ROOM.

CAUTION: THE STRUCTURAL INTEGRITY OF THE MOBILE HOME FLOOR, WALLS AND CEILING/ROOF MUST BE MAINTAINED (DO NOT CUT THROUGH FLOOR JOISTS, WALL STUDS, CEILING TRUSSES, ETC.)

1. A Bixby Direct-Vent system must be used to provide an outside air inlet for combustion air and must be unrestricted.
2. The UBB must be secured to the mobile home by bolting it to the floor (using lag bolts).
3. Refer to pages 16 and 17 for typical vertical or horizontal mobile home venting installation.
4. Refer to clearances to combustibles section on page 4 and 10 for distances to combustibles and appropriate chimney systems.
5. Seal all wall and floor inlets to prevent air or moisture penetration. Check periodically to ensure inlet is free of obstruction, such as snow and ice.
6. Installation should be in accordance with the Manufactured Home and Safety Standard (HUD), CFR 3280, Part 24.

PLANNING THE INSTALLATION

The Bixby UBB is intended for use in buildings, manufactured homes or for mobile home installation (see previous page for mobile home installation instructions).

CAUTION: **THE UBB SHOULD NOT BE INSTALLED AT A LOCATION WHERE IT COULD COME IN CONTACT WITH CURTAINS, DRAPES, WALLS, CARPETING OR OTHER COMBUSTIBLE SURFACES. THE UBB MUST NOT BE INSTALLED IN A SLEEPING ROOM. WHEN CHOOSING A LOCATION, PROXIMITY TO AN ELECTRICAL OUTLET (DO NOT USE AN EXTENSION CORD) AND THE BEST LOCATION FOR THE VENTING OUTLET AND ITS CONNECTING PIPING SHOULD BE CONSIDERED. SEE VENTING INSTALLATION AND INSTRUCTIONS, PAGE 10.**

CAUTION: **THE UBB MUST BE INSTALLED ONLY BY AN AUTHORIZED DEALER, AND/OR BY INDIVIDUALS WHO ARE TECHNICALLY QUALIFIED AND VERSED IN ANY LOCAL CODES OR REGULATIONS THAT MAY APPLY TO INSTALLATION AND APPLICATION OF HEATING EQUIPMENT OF THIS TYPE. CLEARANCES SPECIFIED IN THIS MANUAL ARE MINIMUM AND ANY REDUCTION MUST BE APPROVED BY THE REGULATORY AUTHORITY.**

To assure safe operation, it is absolutely essential that a floor protective device of metal or other non-combustible material be in place beneath the UBB. Note drawing below to determine dimensions the size of the mat.

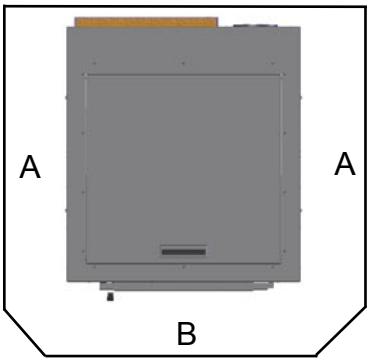

Figure 1

The non-combustible floor protector should extend beyond unit 3 in. (75mm) to each side of unit when installed in a free standing location and 6 in. (150 mm) in front of the UBB door.

A = 3 in. (75mm)
B = 6 in. (150mm)

PERFORMING THE INSTALLATION

The unit is shipped completely assembled. It is enclosed in protective packaging material and attached to a shipping pallet. A shop cart or other suitable material handling device (minimum capacity of 400 lbs. (180kg)) will be needed to transport the Bixby UBB to its desired location. To bring the UBB into the room chosen, a door opening of at least 2 ft. 8 in.(80cm) will be needed. Appropriate tools will be needed to connect the venting pipes and fittings, as well as a hole-cutting device for venting the piping to the outside.

OPTIONAL THERMOSTAT OPERATION

The UBB is designed so that it can be operated by a wall mounted thermostat. Any "on/off" 24V AC wall mounted thermostat can be used. Follow the thermostat installation instructions carefully.

NOTE: Thermostat should be mounted on an inside wall and not in direct line with the UBB convection air. A preferred location would be on an inside wall opposite the UBB.

When the thermostat is calling for heat, the UBB will display the currently selected level using the LEDs. If the thermostat is NOT calling for heat, the currently selected level will be displayed, but all the LEDs will be slowly flashing in unison and the UBB will run at level 1. The UBB will ramp back up to the selected heat level once the thermostat calls for heat again.

THERMOSTAT INSTALLATION INSTRUCTIONS

1. Unplug the UBB.
2. Remove the left side panel.
3. Locate the Trim Pot / Thermostat bracket.
4. Loosen the two screws on the thermostat block and remove the metal jumper.
5. Run the wire for the thermostat through the opening for the air filter on the back panel.
6. Attach the wires of the thermostat to the two terminals.
7. Replace the side panel.

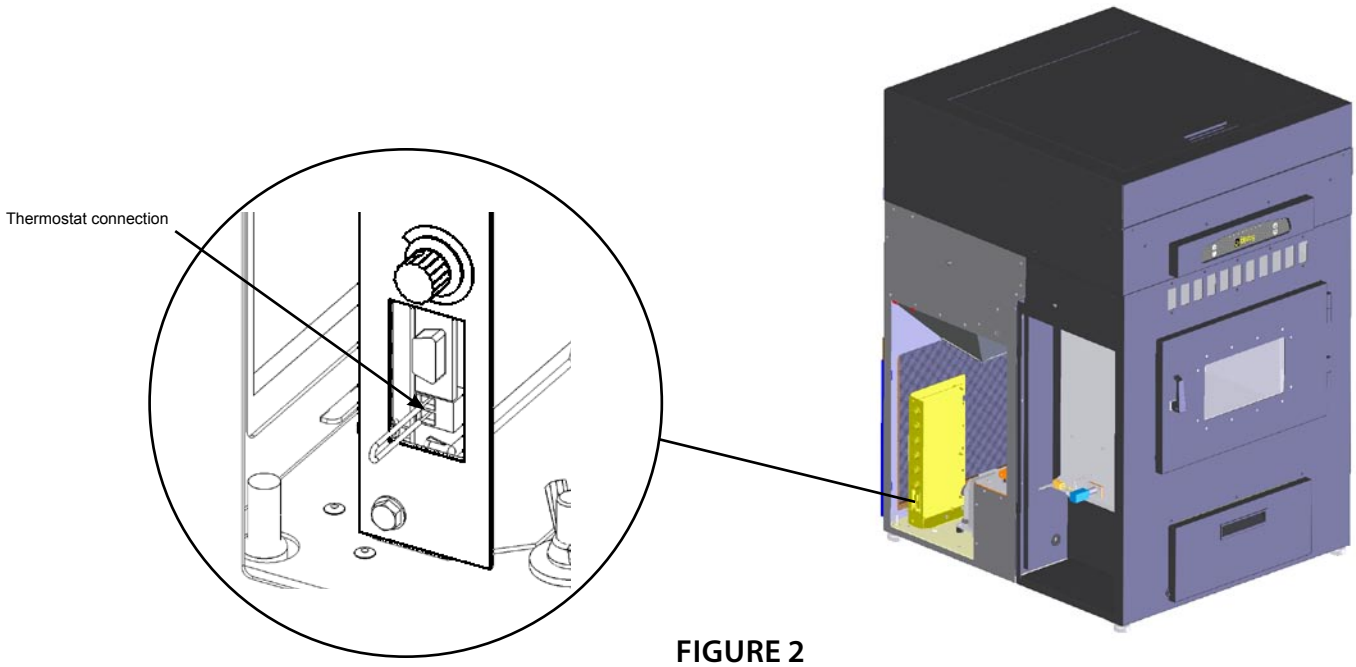

FIGURE 2

LEVELING THE UBB

CAUTION: THE UBB SHOULD BE LEVELED BEFORE ATTACHING THE VENT PIPE.

NOTE: IF A HEARTH PAD IS LAID ON TOP OF CARPET OR OTHER SOFT BASE, ALLOW THE UBB TIME TO SETTLE AND COMPRESS THE CARPET AND PAD BEFORE CUTTING HOLES FOR VENTING.

The supplied bulls eye level can be used to level the UBB front-to-back and side-to-side. A 6 inch level may also be used.

1. Place the level centered side-to-side and about 8 in. (20cm) back from the front of the UBB on the top surface. The bubble should end up centered inside the middle circle on the level. If the bubble is not in that position, the bubble will be towards the high side of the UBB. See Figure 3.
2. Locate the leveling feet on the bottom of the UBB. See Figure 4.
   - To ease the leveling process, adjust each foot 1/2" to 3/4" from the bottom of the stove first
3. Lift the UBB near the foot to be raised (low side, opposite the bubble on the level). A pry bar can be used to lift the UBB, using a wooden shim or something similar to protect the hearth pad.
4. With the corner of the UBB elevated, place a piece of wood (or other blocking) under the UBB to hold it while adjusting the leg. The leg length should be adjusted by hand, but if needed a wrench may be used. This will not work if the foot is turned all the way in, as that portion will not be accessible.
5. Remove the block using the prybar and check adjustment.
6. Proceed to adjust the feet until the bubble is centered inside the inner circle. This is a very important step as the feed system is gravity fed and it will ensure that the fuel is fed into the burn pot correctly.

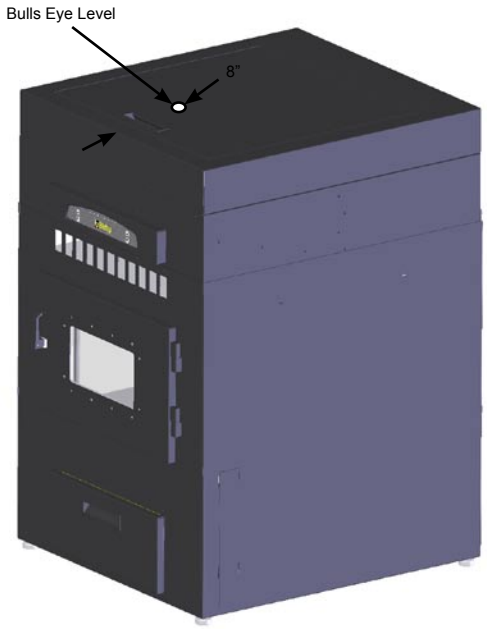

FIGURE 3

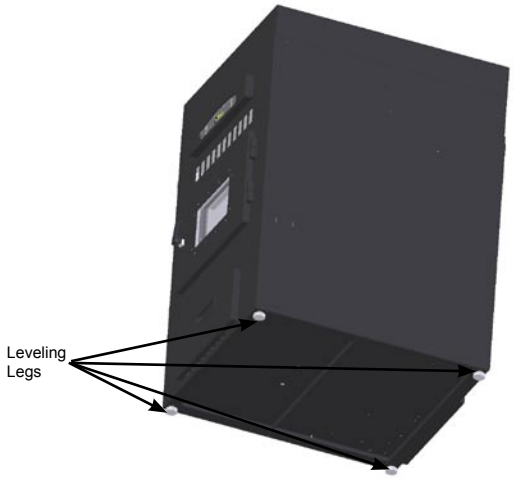

FIGURE 4

VENTING INSTALLATION AND INSTRUCTIONS

WARNING:
A MAJOR CAUSE OF VENT RELATED FIRES IS FAILURE TO MAINTAIN REQUIRED CLEARANCES (AIR SPACES) TO COMBUSTIBLE MATERIALS. IT IS OF THE UTMOST IMPORTANCE THAT THIS VENT SYSTEM BE INSTALLED ONLY IN ACCORDANCE WITH THESE INSTRUCTIONS.

VENT SYSTEM APPROVALS

Bixby Energy Direct Vent Pipe is listed by OMNI-Test Laboratories, Inc. as the venting system for Bixby Energy pellet and corn stoves. NO OTHER PIPE IS LISTED FOR USE WITH BIXBY STOVES. The use of non-Bixby Energy vent pipe will void the stove's warranty.

The minimum clearance from this vent to combustible materials is 2 in. (50mm). Combustible materials include but are not limited to lumber, plywood, sheetrock, plaster and lath, furniture, curtains, electrical wiring, and building insulation of any kind. Never fill any required clearance space with insulation or any other materials.

This vent is tested and listed by OMNI-Test Laboratories, Inc. to UL Standard 641 and to ULC/ORD-C441 (Canada) for safe low temperature Type L venting systems, and produced under the factory inspection and follow-up program of OMNI-Test Laboratories, Inc.

NEVER INSTALL SINGLE-WALL PIPE TO THE UBB.

NOTE:
Proper planning for your vent installation will result in greater safety, efficiency, and convenience, saving both time and money. Use only authorized BIXBY ENERGY, INC. listed parts. Do not install damaged parts.

TOOLS AND EQUIPMENT

Level (a six inch level is recommended)
Eye protection
Hammer
Screwdriver
Tape measure
High temperature waterproof sealant (min 500F)
Saber or keyhole saw
Stud finder
Adjustable wrench
Gloves

CAUTION: THE UBB SHOULD BE LEVELED BEFORE ATTACHING THE VENT PIPE. SEE PAGE 9 FOR LEVELING INFORMATION.

VENTING COMPONENTS

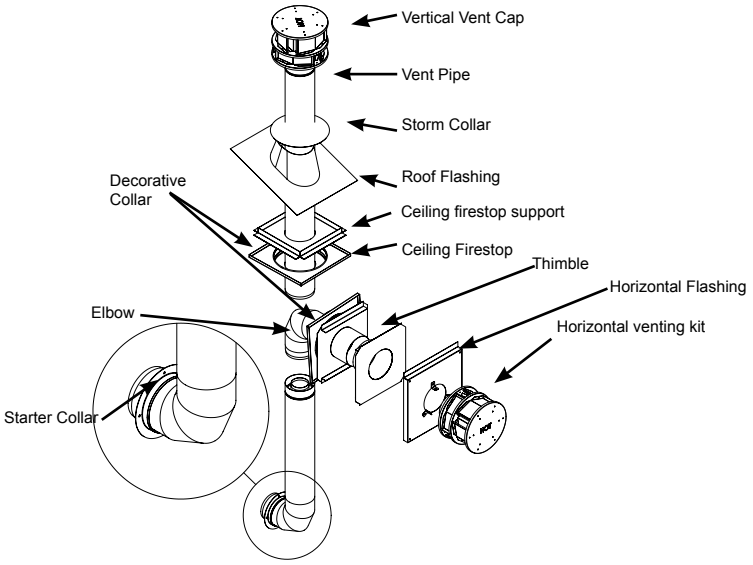

Figure 5

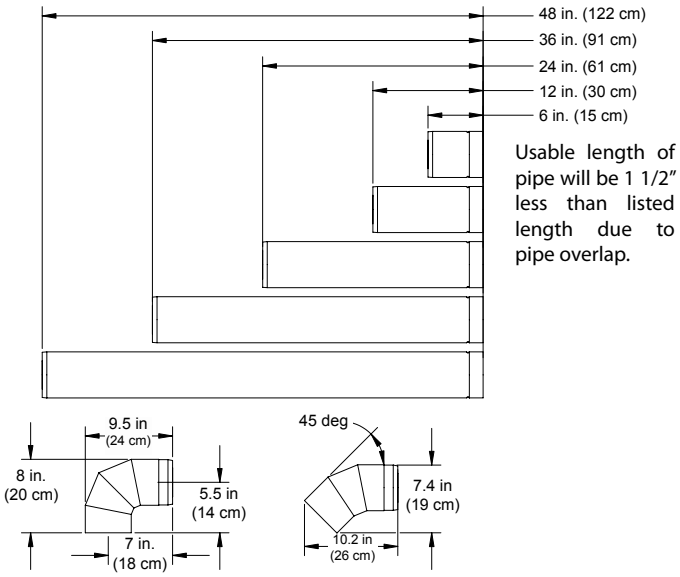

Figure 6

INSPECTIONS

The use of pelletized fuel does not eliminate the need for inspection and cleaning. During the heating season, inspect monthly.

PERMITS

Contact your local building officials, fire officials, or the authority having jurisdiction about restrictions, permits, and inspection requirements in your area.

VENT MAINTENANCE

- **It is essential to have your venting and vent cap cleaned every year (each Spring) to remove soot build up**. If you have doubts about your ability to clean it, contact a professional chimney sweep. Use a plastic, wood, or flexible steel brush. Do not use a stiff brush that will scratch the stainless steel liner of your system.
- Bixby Direct Vent systems must be installed so that access is provided for inspection and cleaning.
- The vent system should be inspected at least once every month during the heating season.
- Chemical cleaners must be used with great caution. Use only those which are absolutely guaranteed not to corrode or have any other harmful effects.
- In case of fire outside the firebox, shut off appliance and call your Fire Department. Do not use the appliance or vent until it has been inspected for possible damage.
- Due to the nature of solid fuels and their production of ash, Bixby Energy is not responsible for flue by-products that might discolor items such as ceilings, roofs, or walls.

VENT LOCATION

When exiting through walls, make sure NFPA rules are followed for distance from windows and openings.

NOTE:

The termination cap will be HOT during operation. Consider its proximity to doors or other traffic areas.

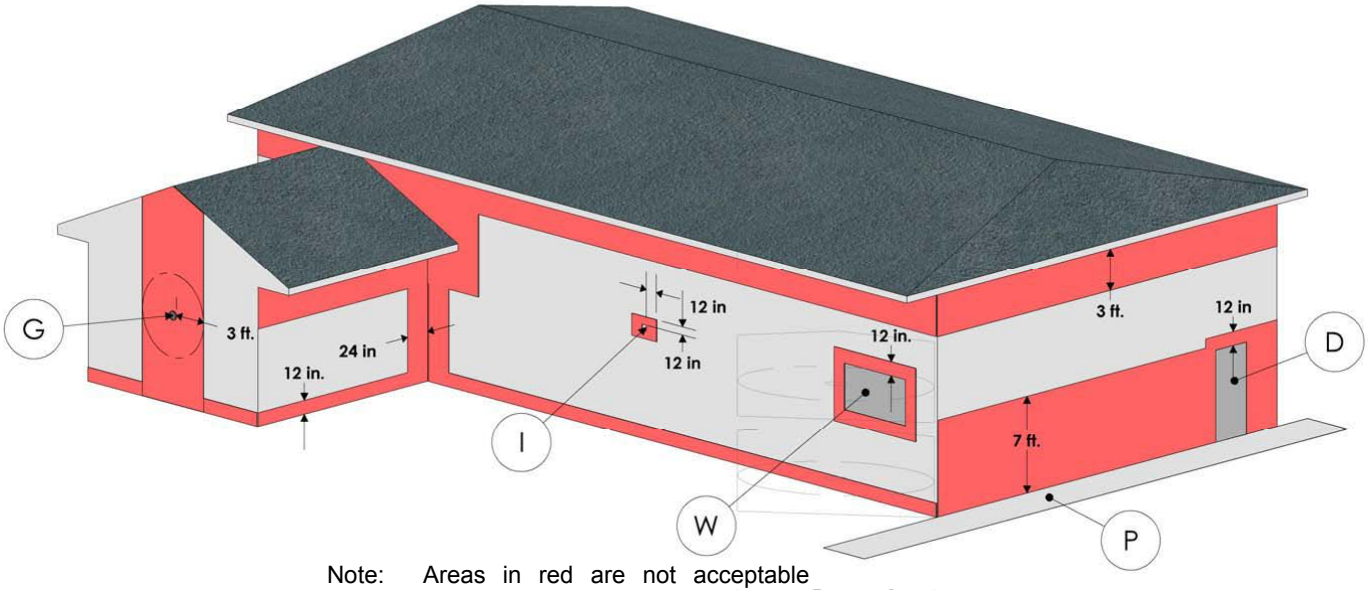

Figure 7

Note: Areas in red are not acceptable locations for venting the UBB. See below for more details

Per NFPA 211 - 2003 (Paragraph 10.4.5 and 10.7.1), the termination cap shall be:

- Not less than 1 ft. (300 mm) from any forced air inlet **(I)**.
- Not less than 1 ft. (300 mm) above grade. Non-combustible ground cover shall be placed below the vent if less than 3 ft. (900 mm) above grade.
- Not less than 1 ft. (300 mm) from any door **(D)**, window **(W)** or gravity air inlet into any building.
- Not less than 2 ft. (600 mm) from an adjacent building and not less than 7 ft. (2.1m) above grade when located adjacent to public walkways / paths **(P)**.

  NOTE: A deck may be considered to be a walk way - check with local building codes.
- Not within 3 ft. (900 mm) of a gas service regulator vent outlet **(G)** (IMC 804.3.4).
- Not above a gas meter/regulator within 3 ft. (.9m) horizontally of the vertical center line of the regulator **(G)**. (IMC 804.3.4)
- Not less than 3 ft. (900 mm) below overhang (i.e. roof)

  NOTE: To provide adequate ventilation, the termination cap should not be located under a deck.

VENT LOCATION (CONT.)

Where passage through a wall or partition of combustible construction is desired, the installation shall conform to CAN/CSA-B365. See specific venting instructions for more information.

The vent **MUST NOT** connect to any air distribution duct or system, or exhaust into an enclosed or semi-enclosed area, but directly to the outside. Termination in a garage, attic, crawl space or other location in which fumes can accumulate must be avoided. The installation with the vent extending vertically through the roof of the building must have the proper termination cap installed. See specific venting instructions for more information.

Bixby Energy recommends not installing a venting system in a pipe chase or permanent wall structure. Vent pipe should be accessible for annual inspection and maintenance. Because solid fuel produces ash, Bixby Energy is not responsible for flue by-products that might damage or discolor building structures (walls, floors, roofs, etc.). If the vent is to be installed inside an existing masonry chimney or other unheated structure (or if excessive condensate forms), it is recommended that the structure be insulated with non-combustible insulation (such as calcium silicate). See your local dealer for insulation options.

LOCATION OF EXHAUST

The vent connection is located on the back of the stove. See Figure 8 for approximate dimensions. Measure actual location before cutting holes in walls.

NOTE: If a hearth pad is used, add the height of the hearth pad to the height of the vent connection from the base, or measure from the top of the hearth pad with the pad in place.

NOTE: If a hearth pad is laid on top of carpet or other soft base, allow the UBB time to settle and compress the carpet and pad before cutting holes for venting.

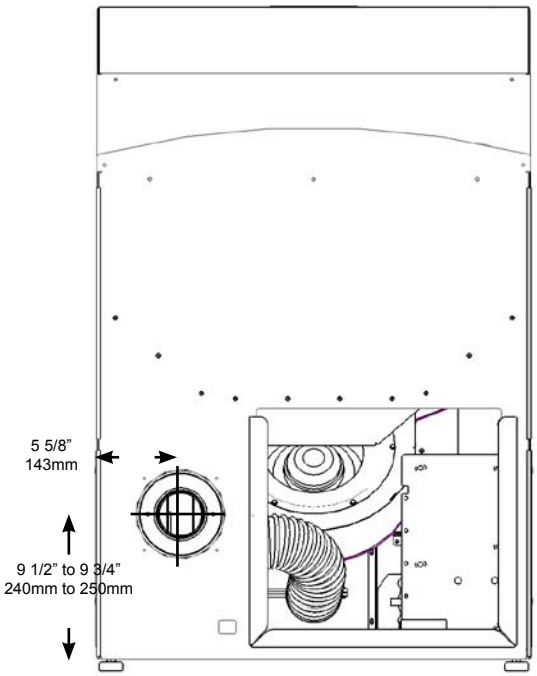

Figure 8

VENTING CONFIGURATIONS

The allowable venting configuration is to be 25 equivalent horizontal feet (7.5 m) or less as determined through the following table:

Type of Pipe	Qty		Factor (ft)	Total
90 deg elbow		x	5 (1.5m)	
45 deg elbow		x	3 (0.9m)	
Horizontal Pipe		x	2 (0.6m)	
Vertical Pipe		x	0.5 (0.15m)	
Altitude (in thousands of feet)		x	2.5 (0.8m)	
			Total	

EXAMPLE:

Type of Pipe	Qty		Factor (ft)	Total
90 deg elbow	1	x	5	5
45 deg elbow		x	3	
Horizontal Pipe	1	x	2	2
Vertical Pipe	20	x	0.5	10
Altitude (in thousands of feet)	2	x	2.5	5
			Total	22

NOTE: Horizontal runs should be minimized (48 in. (1.2m) maximum per section) to prevent the accumulation of ash. If possible, replace horizontal offsets (two 90 degree elbows) with 45 degree offsets (two 45 degree elbows) to go around building structures.

NOTE: Pipe runs at 45 degree are to be considered vertical for the above calculation.

GENERAL VENT INSTALLATION INSTRUCTIONS

Follow the UBB manufacturer's instructions and safety manual for maximum efficiency and safety.
Connect only BIXBY ENERGY DIRECT VENT to the BIXBY UBB.

CAUTION: **CONNECT ONLY ONE FLUE PER APPLIANCE.**
DO NOT INSTALL A FLUE DAMPER IN THE EXHAUST VENTING SYSTEM OF THIS UNIT.
DO NOT CONNECT THIS UNIT TO A CHIMNEY FLUE SERVING ANOTHER APPLIANCE.
OVER-FIRING (TOO MUCH FUEL) CAN DAMAGE THE UBB, VENT PIPE, OR SURROUNDING STRUCTURES.

- The use of three (3) sheet metal screws (self-tapping screws are recommended) is required at every connection. Do not use longer than 3/4 in. (20mm) screws to prevent damage to the inner pipe. The indents in the pipe will assist in the placement of the screws.
- **High temperature (500F/260C) silicone sealant is required on all 3 in. diameter inside joints**. Either high temperature or clear silicone sealant is recommended for the outer 5 in. outside joint. A 1/4 in. (6mm) bead, 1/2 in. (12mm) from the male (crimped) end of both sections of pipe is recommended. See Figure 9.
- The joint is not sealed unless the seam between the two outer sections of pipe is tight and the indent locks into the groove. See Figure 10.

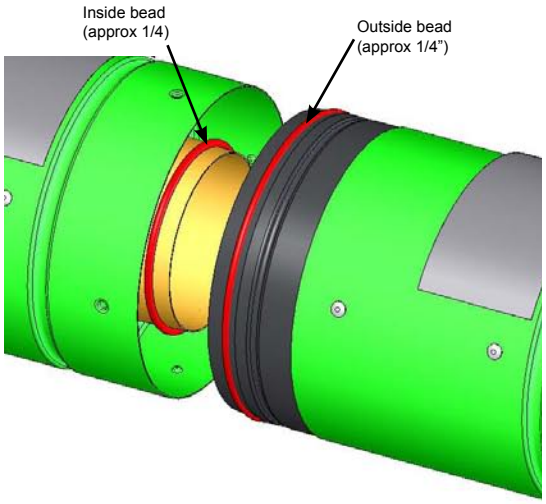

FIGURE 9

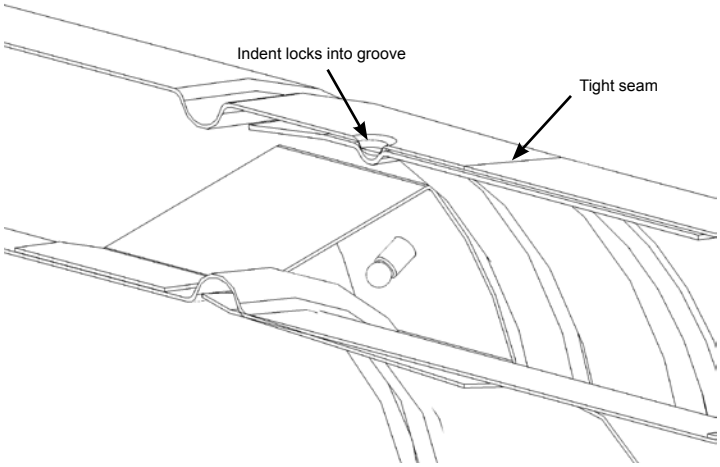

FIGURE 10

WARNING: **ALWAYS MAINTAIN AT LEAST 2 IN. (61MM) CLEARANCE FROM COMBUSTIBLE MATERIALS. WHERE THE CHIMNEY PASSES THROUGH ADDITIONAL FLOORS AND CEILINGS, ALWAYS INSTALL A FIRESTOP/SUPPORT.**

VERTICAL INTERIOR INSTALLATION

The vent connection is on the back of the UBB (see Figure 8). If vertical interior installation is desired:

NOTE: Vertical exterior installation is not recommended due to the potential for excessive condensation.

NOTE: Bixby Energy recommends not installing a venting system in a pipe chase or permanent wall structure (other than to exit the room using the Wall Thimble). Vent pipe should be accessible for annual inspection and maintenance. Bixby is not responsible for damages to pipe chases, or other wall structure resulting from vent failures.

1. Place the UBB according to the installation instructions. See Figure 7 for vent locations.
2. Connect a Starter Collar to the back of the UBB using three screws. See Figure 11.
3. Insert an Elbow through the Starter Collar, into the back of the UBB. Align and push together until snapped into locked position. See Figure 11.
4. The outer pipe sections should not have a visible gap. See Figure 10.
5. Drop a plumb bob from the ceiling to the center of the Elbow connected to the UBB and mark center point on the ceiling, cut and frame a 10 in. x 10 in. (25cm x 25cm) square hole in the ceiling for the Ceiling Support Firestop. See Figure 12.
6. Connect the vertical pipe to the elbow attached to the UBB: Attach each section of pipe by pushing male and female ends of pipe together until pipe is in locked position. See General Vent Installation Instructions, page 15.
7. Install Wall Straps every four (4) feet in both vertical and horizontal vent runs (required). See Figure 13.
8. When the pipe passes through the Firestop/Support at ceiling, attach the vertical pipe support around the pipe and let it rest on the topside of the Firestop/Support. If desired, a Decorative Collar can be installed over the Firestop/Support for a finished look.
9. After lining up for hole in roof, use same method as above and cut either a round or square hole in the roof. Always cut the hole at least 4 in. (10cm) larger than the diameter of the pipe to allow for 2" clearance. Install the upper edge and sides of Flashing under the roofing materials and nail to the roof along the upper edge. Do not nail the lower edge. The Vent Cap must extend a minimum of 24 in. (61cm) above the roof. See Figure 13.
10. Seal all nail heads with high-temperature waterproof sealant. To finish, apply high-temperature waterproof sealant where the Storm Collar will meet the vent and Roof Flashing; slide Storm Collar down until it sets on the Roof Flashing, tighten the bolt on the Storm Collar, put the Vent Cap on and push to lock. See Figure 14.

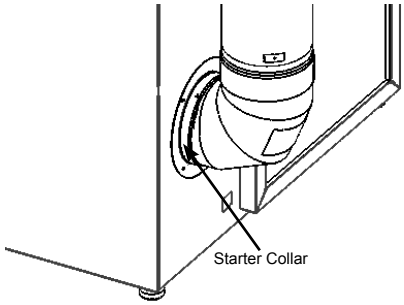

FIGURE 11

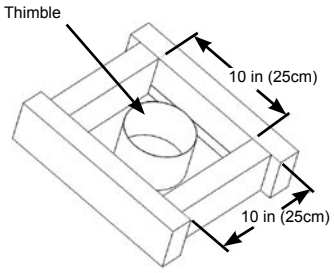

FIGURE 12

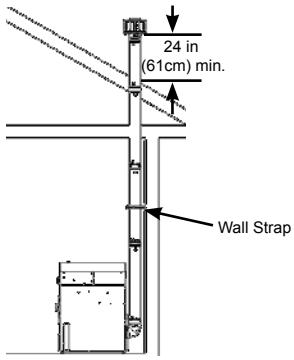

FIGURE 13

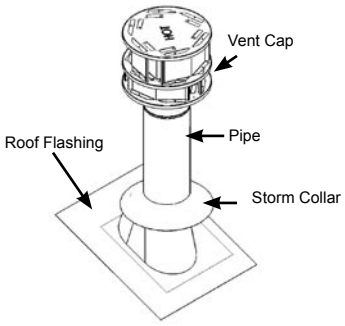

FIGURE 14

HORIZONTAL THROUGH-THE-WALL INSTALLATION

The vent connection is on the back of the UBB (see Figure 8). If a horizontal through-the-wall installation is desired:

1. Place the UBB according to installation instructions. See Figure 7 for vent locations.
2. Locate vent termination per the NFPA rules. See Figure 7.
3. Cut and frame a 10 in. X 10 in. (25cm x 25cm) square opening in the wall (the hole in the wallboard may need to be larger). See Figure 12 (page 16). The telescoping Wall Thimble is to be installed in the interior and exterior portion of the wall. (Wall Thimble adjusts from 4 ¼ in. to 7 in. (11cm to 18cm) to accommodate most wall thicknesses). See Figure 16.

   - The Wall Thimble flanges are to be attached to the supports with four screws, one in each corner. Use of 1/2 inch or longer screws are recommended.

   - The Wall Thimble may be covered on the inside by the Decorative Collar. It is important to slide the collar on before adding additional venting.
4. Attach the outside vent flashing to the exterior wall with four screws. Seal the outside section of the Horizontal Flashing and Wall Thimble to the exterior wall with non-hardening sealant. Top tab is to be placed under wall siding. Do not seal the bottom of the flashing.
5. Connect the Starter Collar to back of UBB and attach sufficient pipe to the UBB to extend 12 in. - 15 in. (30-38cm) beyond the Flashing. See Figure 16.
6. Anchor the pipe to the Horizontal Flashing with the three brackets using the self tapping sheet metal screws shipped with the flashing. The back/base of the cap is to extend 12-15 inches (30-38 cm) from the flashing. See Figures 15 and 17.
7. Attach the Vent Cap, noting orientation of embossment, to the extended pipe. Use high temperature (500 F/260 C) silicone sealant between all pipe joints. See Figure 9.

NOTE: Some amount of soot and discoloration may occur on the outside of the house.

NOTE: If ice forms on the Vent Cap in cold weather, run the UBB on high for a couple of hours to clear.

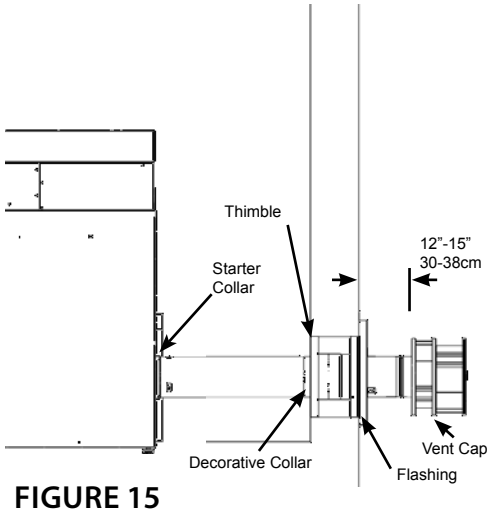

FIGURE 15

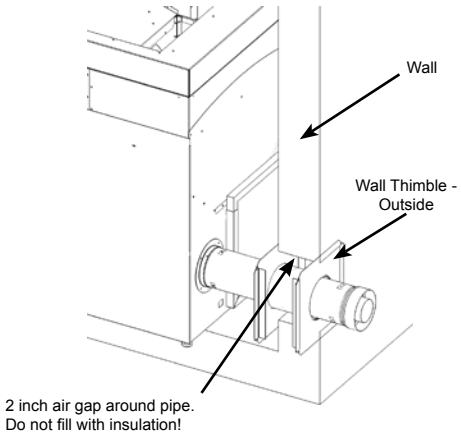

FIGURE 16

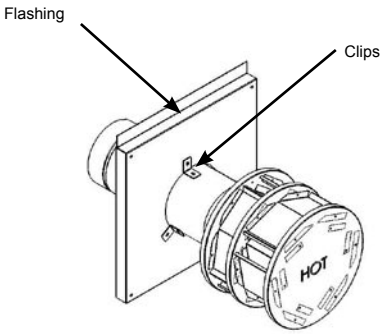

FIGURE 17

INSTALLATION IN A CATHEDRAL CEILING

For installation into a sloped ceiling, the Cathedral Ceiling Support Box is to be used as the fire stop. Follow the instructions for vertical installation on page 16 up to step 4.

1. Mark a line on the side of the Cathedral Ceiling Support Box to correspond to the line of the roof pitch. Allow for the Support Box to protrude below the finished ceiling a minimum of 2 in (5 cm). See Figure 18.
2. Position the appliance at its proper location on the floor. Pay close attention to the installation instructions as to distances from combustibles, etc. The appliance must also be positioned so that the Support Box will not interfere with roof rafters or other structural framing.
3. Run a plumb line from ceiling to the center of the vent pipe attached to the UBB. Mark the point on the ceiling where the plumb line intersects. This represents the center of the support box. Drill a small hole through the ceiling at this point, so it can be located from the top of the roof.
4. From the roof, locate and mark the outline of the Support Box.
5. Remove shingles or other roof covering as necessary to cut the rectangular hole for the Support Box. Cut the hole 1/8 in (3 mm) larger than the dimensions of the Support Box. The rectangular hole should be centered on the small hole which you drilled through the ceiling to mark the location. Again, ensure that you are not cutting through rafters or framing members.
6. Run the Support Box through the roof, and place it so that the bottom of the Support Box protrudes at least 2 in (5 cm) below the finished ceiling. Align the Support Box vertically and horizontally with a level. Temporarily tack the Support Box in place through the inside walls and into the roof sheathing. See Figure 19.
7. Using tin snips, cut the Support Box from the top corners down to the roof line, and fold the resulting flap over the roof sheathing. Before nailing it to the roof, run a bead of non-hardening sealant around the outside top edges of the Support Box so as to make a seal between the box and the roof. Clean out any combustible material or debris from inside the Support Box. See Figure 20.

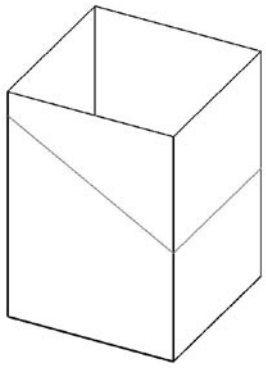

FIGURE 18

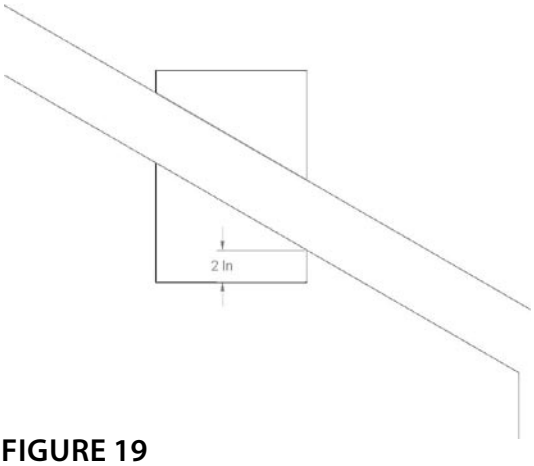

FIGURE 19

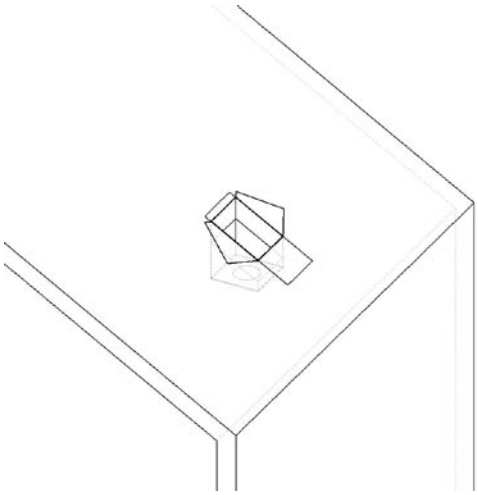

FIGURE 20

INSTALLATION IN A CATHEDRAL CEILING (CONT.)

8. Place the Vertical Support Clamp (5000576), around the top of the hole in the bottom of the Support Box. See Figure 21.
9. Connect the necessary amount of pipe sections to reach the UBB at a point where the Vent Cap will extend a minimum of 24 inch (61 cm) above the roof. See Figure 22.
10. Run the assembled pieces of vent pipe down through the Clamp of the Support Box and connect to the appliance with an Elbow and Starter Collar. See General Vent Installation Instructions for details on connecting the pipe together.
11. Using a level, make slight adjustments in the position of the appliance until the pipe is truly vertical. Tighten the bolts in the Clamp.
12. Slip the Flashing over the pipe section(s) protruding through the roof. Secure the base to the roof with roofing nails. Insure that the roofing material overlaps the top edge of the Flashing. See Figure 22.
13. Seal all nail heads with high-temperature waterproof sealant. To finish, apply high-temperature waterproof sealant where the Storm Collar will meet the Vent and Flashing; slide Storm Collar down until it sets on the Flashing, put the Vent Cap on and push to lock. See Figure 14 (page 16).

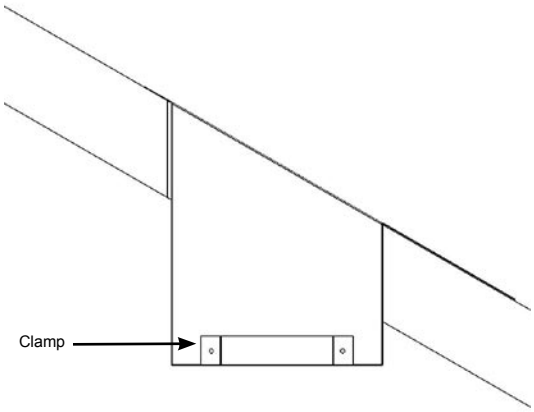

FIGURE 21

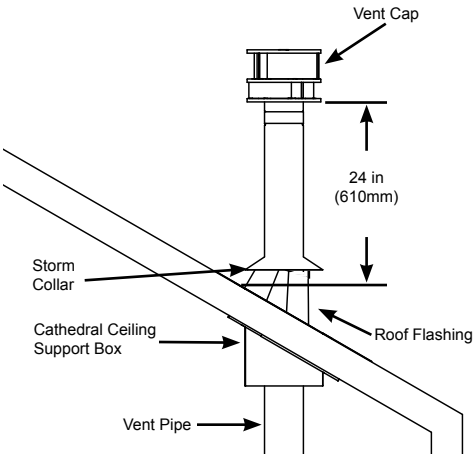

FIGURE 22

CONNECTING TO EXISTING CLASS A CHIMNEY (EITHER 6" OR 8")

Due to cleaning, inspection, and condensation issues, Bixby Energy no longer recommends connecting the UBB to an existing Class A chimney.

INSTALLATION THROUGH THE SIDE OF A MASONRY CHIMNEY

Due to cleaning, inspection and condensation issues, Bixby Energy no longer recommends connecting the UBB to an existing masonry chimney. The venting may pass though the chimney to the outside; see previous pages for horizontal venting information.

OPERATING INSTRUCTIONS

FUEL

- Open the hopper lid and fill the hopper with fuel.
- See Specifications (page 5) for fuel recommendations.
- The UBB is configured to burn corn from the factory. To burn wood pellets, simply open the left side panel and locate the Control Board Trim Pot Panel. Rotate the knob labeled "Fuel Mix" from A to B. See Figure 23.

CAUTION: **DO NOT BURN GARBAGE, OR FLAMMABLE FLUIDS SUCH AS GASOLINE, NAPHTHA OR ENGINE OIL IN YOUR BIXBY UBB. STORE ANY FUEL AWAY FROM YOUR UBB.**

STARTUP

NOTE: Use of a surge protector is recommended but not required for UBB operation.

CAUTION: **OPERATE THE BIXBY UBB ONLY WITH THE FUEL HOPPER DOOR CLOSED. FAILURE TO DO SO MAY RESULT IN EMISSION OF PRODUCTS OF COMBUSTION FROM THE FUEL HOPPER UNDER CERTAIN CONDITIONS. DO NOT OVERFILL HOPPER, DO NOT OVERRIDE THE SAFETY SWITCH. FUEL WILL NOT BE DELIVERED TO THE FIREPOT IF THE HOPPER DOOR IS OPEN.**

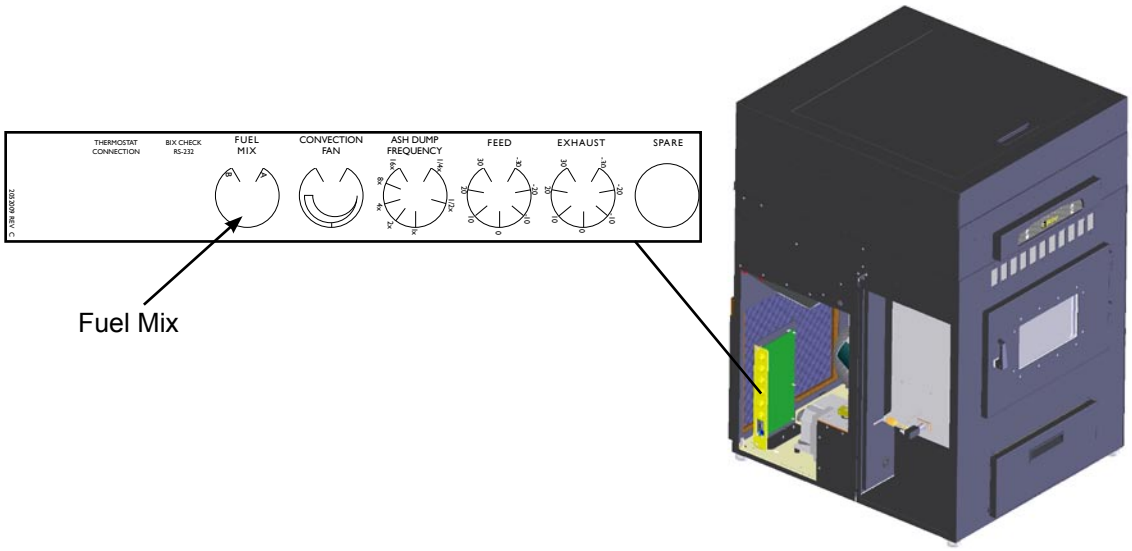

FIGURE 23

STARTUP (CONT.)

1. Open the Fuel Hopper Door on the top of the Bixby Energy UBB and fill the hopper with corn, biomass pellet fuel, or a Bixby Energy approved alternative. Close Hopper Door.

2. Verify that the fuel deflector is in place.

3. Plug in the Bixby UBB's grounded, 3-prong power cord. A grounded 115 volt, 60 Hz, 15 amp power supply is required. **Do not use extension cords**. The furnished power cord must be plugged directly into a suitable outlet. Route power cord away from the Bixby UBB. The exhaust fan will operate for approximately 30 minutes when the UBB is plugged in. This is normal and is to ensure that any remaining combustion gases are removed in the event of a power outage.

4. Operation: Press the "On" button on the Control Panel to start the UBB. Then press the Up/Down arrows to set the heat output to the desired level (the "Up" arrow increases the heat output, the "Down" arrow decreases it). The first time the UBB is used, or in cases when fuel in the hopper has been completely expended, sufficient fuel may not have been supplied to allow the unit to start properly. If this happens, press and hold the "Off" button, and then press the "On" button to restart the unit after fuel begins feeding into pot.

4a. Optional Thermostat Operation: The thermostat <u>will not start or shut down the UBB</u>. When the thermostat is calling for heat, the UBB will operate at the selected level. When the thermostat is not calling for heat, the UBB will drop to level 1 to maintain the burn. The lights will slowly blink when the thermostat is not calling for heat.

4b. Manual Igniting Information (Note: electrical power is still required to operate fans and motors): To manually ignite the UBB if the igniters are not functioning, press the "ON" button on the control panel. After the fuel has started to be delivered to the burn pot, remove the ash drawer to access the bottom of the pot. Ignite the fuel by heating the bottom of the burn pot with a MAPP torch and maintain a flame. Once the fuel has thoroughly ignited, replace and close the ash drawer and verify the flame is stable. Contact your dealer to replace ignitors.

<u>NOTE: Wood pellets and starter gel will help if there is difficulty in manual starting, but do not use starter gel after startup.</u>

5. Normally, the fuel will ignite within three to seven minutes, and full flame stability will be achieved within twenty minutes. Heat production will then begin to reach the desired comfort level. If stable ignition does not take place within this time and there is fuel building up in the burning area, press and hold the "Off" button and then press the "On" button to restart the unit.

6. To shut down the Bixby UBB, press and hold the "Off" button on the control panel; allow three to ten minutes for flame-out to occur. The stove will remain in shutdown mode for 30 minutes as the stove continues to cool.

NOTE: The convection blower and the exhaust fan will continue to run for 30 minutes as the UBB cools.

7. Power Outages: If there is a momentary (less than 10 second) loss of power, your UBB will continue to heat. If the power is interrupted for longer than 10 seconds, you will have to restart your unit after the power is restored. The #1 light will be blinking, indicating a power failure.

NOTE: Ash Drawer: Opening the ash drawer during UBB operation will disable the ash dump process. Be sure to replace and latch the ash drawer once emptied. If the ash drawer is open for more than 20 minutes, the unit will go directly into shut-down mode.

NOTE: Front Door: <u>The door must be closed and latched while the UBB is running</u>. Always allow the UBB to cool before opening for cleaning. If the door is open for more than one (1) minute, the unit will go directly into shut-down mode.

NOTE: Ash Dump: If the burn pots begins to overfill, press the "ON" button to cycle the ash dump system to dispense excess fuel into the ash drawer.

CAUTION: NEVER USE HIGHLY-VOLATILE FUELS SUCH AS GASOLINE, GASOLINE-TYPE LANTERN FUEL, KEROSENE, CHARCOAL LIGHTER FLUID, OR SIMILAR SUBSTANCES IN THE BIXBY UBB. KEEP ALL SUCH LIQUIDS WELL AWAY FROM THE BIXBY UBB WHEN IT IS IN USE. USE OF SUCH FUELS COULD CAUSE OVER-FIRING AND WILL VOID THE UNIT'S WARRANTY.

CONTROL BOARD TRIM POT PANEL

The control board trim pot panel is located on the left hand side of the stove near the air filter.

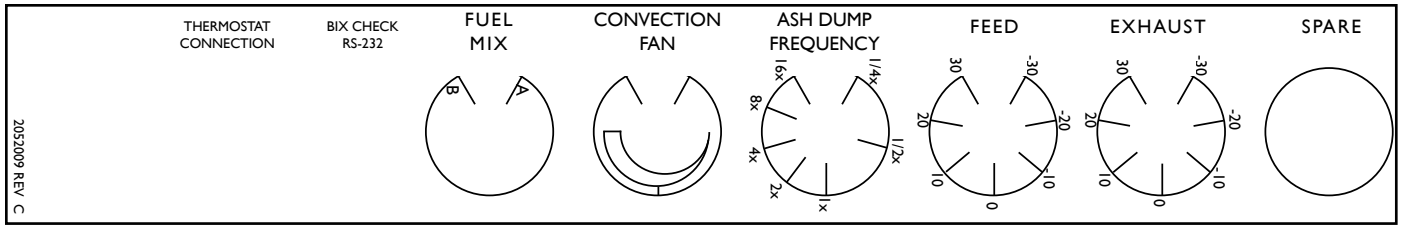

CONTROL	DESCRIPTION
Thermostat Connection	See page 8 for Thermostat connection details
Bix Check RS-232	For service use only
Fuel Mix	Fuel A is set to corn and Fuel B is set to wood pellets at the factory. See your Bixby dealer for additional fuel options.
Convection Fan	Adjusts the speed of the convection fan.
Ash Dump Frequency	Adjusts the timing of the ash dump sequence. If adjustments are not effective, contact your Bixby dealer for service. • If the ash dump procedure malfunctions due to jamming, increase (+) the frequency (reduce time between) one step to reduce the size of the ash "cookie". • If the fire goes out during the ash dump procedure, decrease (-) the frequency (increase time between) to prevent dumping all the burning coals during the dump sequence.
Feed	Adjusts the rate of fuel delivered to the firepot. • Make adjustments in 5%-10% increments allowing stove to stabilize (30 min) before further adjustments are made. If adjustments are not effective, contact your Bixby Dealer for service. • If the flame is weak and lazy and the fuel in the pot is building up, the fuel is burning too slow and the fire is relatively cool. Decrease the fuel delivery rate <u>or</u> increase exhaust fan speed (see below). • If the flame is oscillating (high flame / low flame) with the feed of fuel, the fuel is burning too quickly. Increase the fuel delivery rate <u>or</u> decrease the exhaust fan speed (see below).
Exhaust	Adjusts the Exhaust fan speed. • Make adjustments in 5%-10% increments allowing stove to stabilize (30 min) before further adjustments are made. If adjustments are not effective, contact your Bixby Dealer for service. • If the flame is weak and lazy and the fuel in the pot is building up, the fuel is burning too slowly and the fire is relatively cool. Increase (+) the exhaust fan speed, <u>or</u> decrease (-) the fuel delivery rate (see above). • If the flame is oscillating (high flame / low flame) with the feed of fuel, the fuel is burning too quickly. Increase (+) the fuel delivery rate <u>or</u> decrease (-) the exhaust fan level (see above).
Spare	Not currently used (future expansion)

FINE TUNING THE UBB

The UBB comes from the factory with the following trim pot knob presets:

- Exhaust Fan: +/- 0
- Feed Rate: +/- 0
- Ash Dump Frequency: 1x

These initial settings are derived from Bixby testing and may not be optimal for your fuel. Outside air temperature, ash content, fuel moisture content, mineral content, etc. all affect the burn characteristics. Therefore, additional adjustments may be required. Use the following guidelines to assist in making adjustments specific to your environment and fuel:

Note: Wait 30 minutes after starting the UBB to allow the stove to transition from start-up mode to normal operating mode before adjusting the settings.

When making adjustments, it is suggested that a note be kept of the adjustment and the effects on the flame. A good burning flame will be yellow in color and very lively and the soot will be primarily white.

INDICATIONS OF A GOOD BURNING FLAME:

- Ash level is fairly consistent in the upper burn pot.
- Flame height is relatively steady.
- Flame is lively and yellow in color.
- Soot buildup on door and heat exchanger cover plates is primarily white.

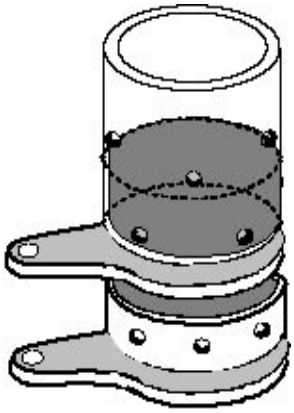

CORRECT
Low & level ash height prior to ash dump

INDICATIONS OF A RICH BURNING FLAME (TOO MUCH FUEL):

- Ash and unburned fuel is slowly but evenly filling the upper burn pot.
- Flame is lazy and orange in color.
- Flame has black wisps of smoke coming from the flame tips.
- Black soot buildup on door and heat exchanger cover plates.

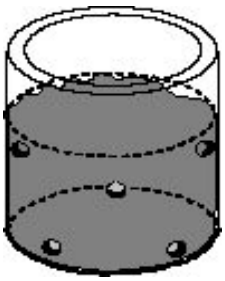

RICH
High unburned fuel height prior to ash dump

REMEDY - Turn feed rate down a single indicator mark and observe. After 30 minutes, observe and make additional adjustments if necessary.

FINE TUNING THE UBB (CONT.)

INDICATIONS OF A LEAN BURNING FLAME (TOO LITTLE FUEL):

- Flame is oscillating from low flame height to high flame height over a period of several minutes.
- Ash and unburned fuel is slowly building up on one side of the burn pot.
- Ash clinkers are hard and have a white molten appearance.
- Flame is short and white in color.
- Flame appears to burn on only one side of the burn pot.
- #2 and #3 LED blink repeatedly.

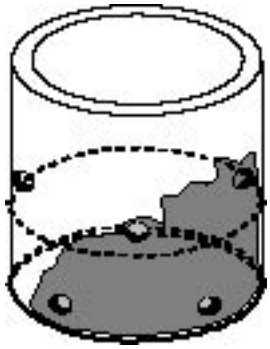

LEAN BURNING
Low/sloped ash height prior to ash dump

REMEDY - Turn feed rate up a single indicator mark and observe. After 30 minutes, observe and make additional adjustments if necessary.

NOTE:

It is important to note that the stove does not respond quickly to trim pot knob adjustments. Therefore, anytime adjustments are made, turn the knob a single indicator mark or less and wait at least 30 minutes for the stove to stabilize before making further adjustments.

Adjusting the exhaust fan and feed rate trim pots affect the air/fuel ratio . However they work inversely to each other. For example, if the exhaust fan is adjusted to +3 and the feed rate is adjusted to +3, the air/fuel ratio remains unchanged.

FINE TUNING THE UBB (CONT.)

ASH DUMP PROCESS:

The UBB performs an ash dump according to the amount of fuel that has been fed. At the time of an ash dump, the upper pot should have approximately 1/2" to 3/4" of burning embers. These embers are required to maintain a flame during and after the ash dump process.

Before adjusting the ash dump frequency, be sure that the UBB is burning properly (neither too rich nor too lean). The ash dump frequency rarely needs adjustment for typical shelled corn and wood pellets. Adjustment to this setting only occur with fuels with exceptionally low or high ash contents such as switch-grass or some premium grade wood pellets. The ash dump frequency trim pot should only be adjusted if the upper burn pot is filling with ash, not unburned fuel. Unburned fuel is a result of burning with the feed rate too high (rich).

HIGH ASH CONTENT:

The ash dump frequency can be adjusted to burn fuels with high ash content, such as switchgrass and low quality wood pellets. If the ash level is less than 2-1/2" from the top of the burn pot immediately prior to the ash dump, turn the ash dump frequency knob clockwise (i.e.1.5x). It may take many iterations to dial in the ash dump frequency because it can be many hours between ash dumps. Increase in small increments as necessary.

LOW ASH CONTENT:

If the fuel appears to be burning properly (neither too lean nor too rich), but the embers are completely dropped during the ash dump cycle, turn the ash dump frequency counter-clockwise (i.e. 3/4x or 1/2x). This will reduce the frequency of the ash dump and permit embers to build-up into the upper pot. It may take many iterations to dial in the ash dump frequency because it can be many hours between dumps. Reduce in small increments as necessary.

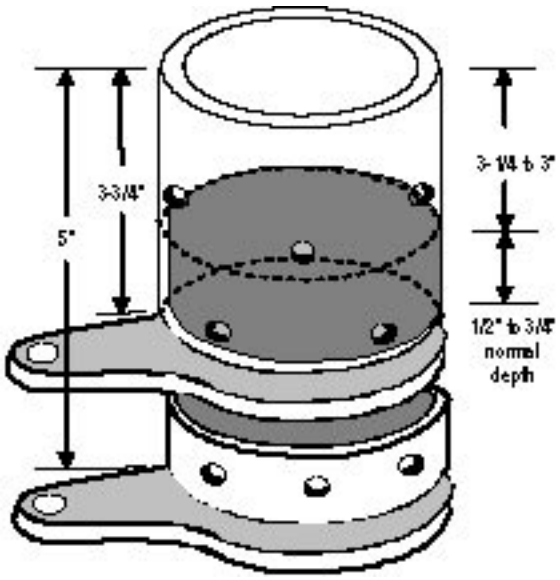

CORRECT
Ash height prior to ash dump

MAINTENANCE AND CLEANING PROCEDURES

The UBB has been designed to reduce the frequency of cleaning. However, if the simple maintenance tasks detailed below are not performed - the UBB will not run properly. Failure to follow this maintenance schedule may lead to reduced heating efficiency, increased operational problems and potential harm to internal components. Reading and following the maintenance instructions will keep the UBB running at optimal efficiency and will help to reduce problems over the long run. Many problems can be solved by simply cleaning the UBB. This should be the first step in troubleshooting if the UBB is not working properly.

NOTE: Keep the area around the UBB clean and free of dust and debris.

CAUTION: **ALWAYS BE SURE TO ALLOW THE UBB TO COOL AND THEN UNPLUG BEFORE ANY MAINTENANCE PROCEDURES ARE PERFORMED.**

COMPONENTS REQUIRING PERIODIC CLEANING:

FIRE POT/BURNER

The ash dump components are powered by an electric motor. The automatic operation serves to clear the ash/deposits from the Fire Pot.

The area below the top burner plate should be vacuumed monthly. The sidewalls of the fire pot should be brushed monthly with the included brush to remove deposits. If needed, the pot may be removed and soaked in a bucket of water. To remove the burner, remove the fuel deflector and top burner plate (handle in front of the burner), remove the two clips holding the burner in place and lift out the burner. After cleaning the burner components and the area below the top burner plate, replace the burner components and reinstall the two clips to hold everything in place.

Good combustion is dependent on delivering the right amount of air to the burn pot. Keeping the pot clean and the holes clear will

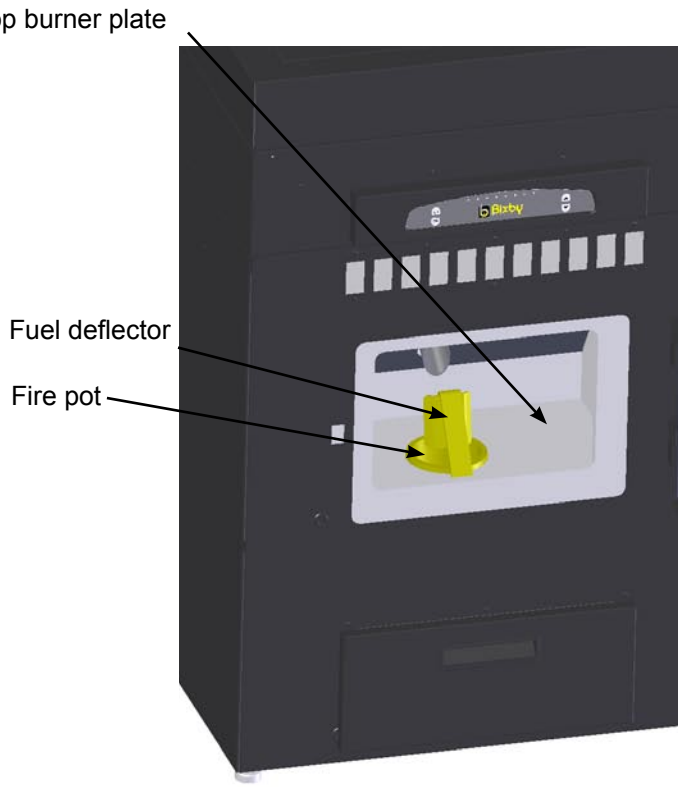

FIGURE 24

ASH DRAWER

The ash drawer and ash drawer compartment should be cleaned as needed. Pull the Ash Drawer out and empty its contents into a metal container with a tight fitting lid. Vacuum the ash drawer compartment to remove any debris.

CAUTION: **DRAWER AND CONTENTS MAY BE HOT.**

NOTE: Return the drawer promptly (less than 20 minutes) after emptying. While the drawer is open, the UBB will not dump the ashes

The ash drawer should be checked and emptied after burning approximately 300 lbs. (1 full hopper) of fuel. Actual frequency will vary with usage; check every few days.

Ashes should be placed in a metal container with a tight-fitting lid. The closed container of ashes should be placed on a non-combustible floor or on the ground, well away from all combustible materials, pending final disposal. If the ashes are disposed of by burial in soil or otherwise locally dispersed, they should be retained in the closed container until all cinders have been thoroughly cooled.

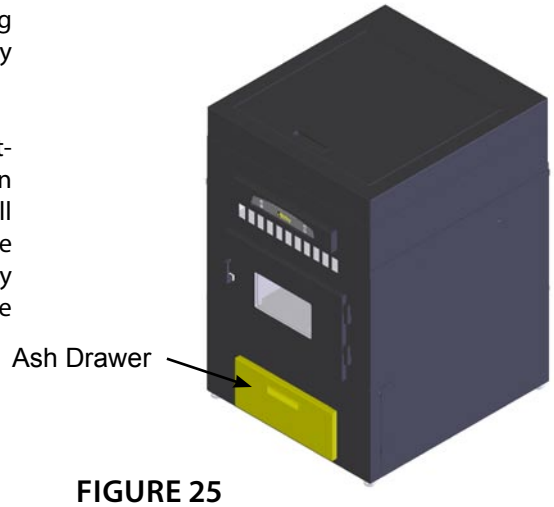

FIGURE 25

HEAT EXCHANGER TUBES (WEEKLY)

Fly ash and other deposits will accumulate on the Heat Exchanger Tubes over time and will act to insulate the tubes, reducing their ability to heat the convection air and thus the home or building.

There are two banks of Heat Exchanger Tubes, both of which are equipped with a cleaning lever. The levers are located above the cover plates. To clean the tubes, pull the right side lever straight up approximately 1" (2 cm). Carefully remove the back panel. Repeat for the left side. Once the back panels have been removed, slide the levers up and down until they move freely. Vacuum out the base of the Heat Exchanger Tubes and the firebox. See Figure 26.

To replace the back panels; lift the left lever straight up, slide the left panel underneath. Repeat for the right hand side. See Figure 27.

FIGURE 26

NOTE: The panels must be installed for proper exhaust flow.

SOOT AND FLY ASH FORMATION AND NEED FOR REMOVAL (YEARLY)

The by-products of combustion will contain small particles of fly ash. The fly ash will collect in the exhaust venting system (vent pipe) and restrict the flow of the flue gases. Incomplete combustion during startup, shutdown, or incorrect operation of the UBB, will lead to soot formation which will collect in the exhaust venting system. Inspect the exhaust venting system at least yearly, cleaning as required. Also, inspect any exhaust outlet to maintain a clear and unobstructed exhaust/intake port.

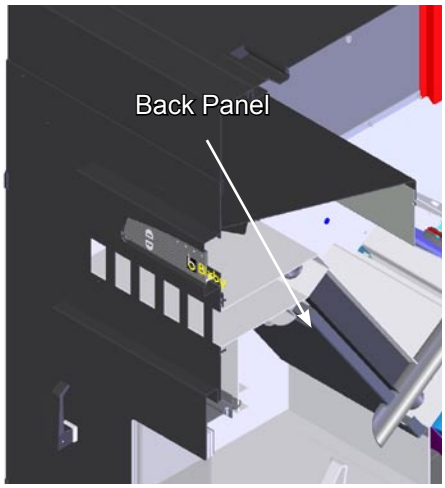

FIGURE 27

EXHAUST FAN (YEARLY)

CAUTION: UNPLUG THE UBB FROM THE POWER SOURCE BEFORE CLEANING THE FAN BLADES.

To access this component, open Right Side Panel, and remove the fan cover. See Figure 28. Using a brush and a vacuum, clean the impeller, and fan housing. Inspect the gasket. If it is torn, replace gasket before placing the stove back into service.

This cleaning should be performed once a year.

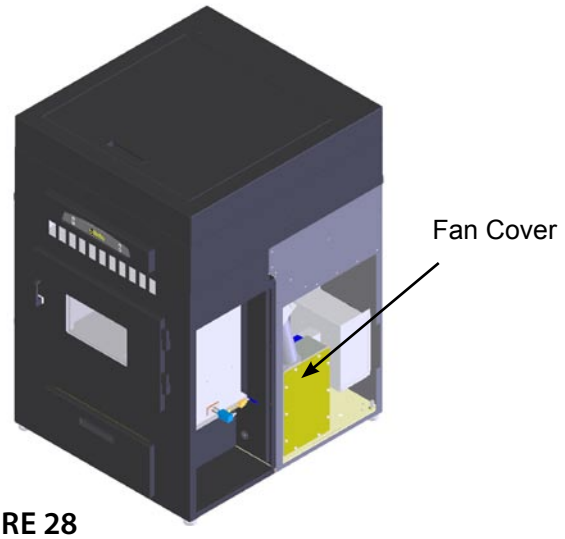

FIGURE 28

CLEANING THE EXHAUST MANIFOLD (MONTHLY)

The Exhaust Manifold should be cleared on a monthly basis to ensure proper air flow in the UBB.

1. Turn off the UBB and allow to completely cool (minimum of 2 hours).
2. Remove the heat exchanger cover plates (see previous page for instructions).
3. Move the cleaning levers up and down several times until they move freely. If needed, a bent wire can be used to clean the back side of the tubes to ease movement of the cleaning levers.
4. Using a shop vac, clean the ash around the base of the tubes. See Figure 29.
5. Use the Exhaust Manifold Vacuum Attachments (available at your dealer) to clean in behind the tubes.
6. Replace the heat exchanger cover plates.

FIGURE 29

FUEL HOPPER (MONTHLY)

The Fuel Hopper should be cleaned on a regular basis (monthly) to remove fines (dust and small pieces of fuel) and ensure proper fuel delivery.

1. Remove the hopper cover and set aside.
2. Empty the hopper of as much fuel as possible by vacuuming or by hand.
3. Vacuum the base of the feeder wheel to remove small particles and other debris.
4. Remove the feed wheel access plate and vacuum around the feed wheel. See Figure 30. Replace plate after cleaning.
5. At the end of the heating season, vacuum out all fuel from the hopper to prevent mold.

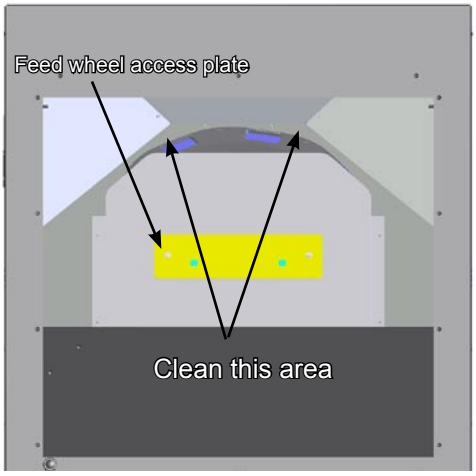

FIGURE 30

CLEANING THE GLASS (AS NEEDED)

Depending on the fuel used and the amount of use, the glass window will need to be cleaned. The glass can be cleaned using any available glass cleaner. Do not use abrasive cleaners to clean the glass. For tough cleaning use cleaners designed for ceramic stove tops.

CAUTION: **BEFORE CLEANING THE GLASS, ALLOW THE UBB TO COOL (MINIMUM 2 HRS). DO NOT SPRAY WINDOW CLEANER ON THE GLASS IF IT IS HOT.**

NOTE: Tighten door latch after the first month of operation to maintain door seal by adjusting the latch on the door handle.

CLEANING THE FEEDER TUBE (MONTHLY)

The Fuel Feeder Tube should be cleaned out on a regular basis (monthly) to ensure proper fuel delivery.

1. Allow UBB to cool, minimum 2 hrs.
2. Open the Glass Door.
3. Using a screw driver or small brush, scrape the inside of the feeder tube. See Figure 31.

If the tube needs to be cleaned more than every 4 to 5 bags of fuel (two full hoppers), clean the fuel hopper (above).

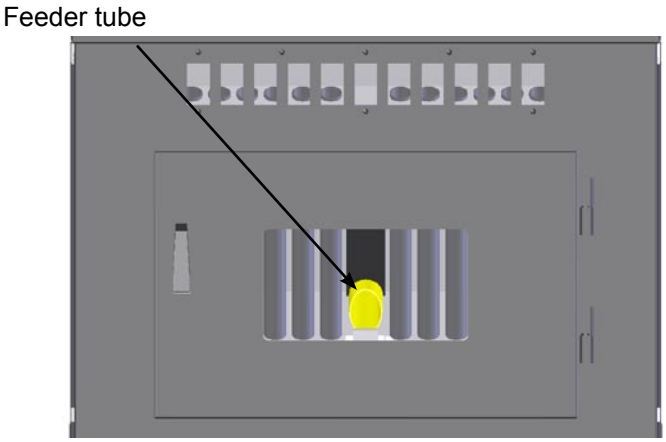

FIGURE 31

CLEANING THE LOWER PADDLE (MONTHLY)

The Lower Paddle needs to be cleaned once a month in order to operate efficiently. The ash dumping process causes the holes in the lower paddle to eventually clog with ash.

1. Turn off the UBB and allow to cool (2 hours).
2. On the control panel, push the "ON" and then the "OFF" button immediately to clear the burn pot and to place the lower paddle in the correct position for cleaning.
3. Unplug the UBB.
4. Open the glass door or ash drawer to gain access to the burn pot.
5. Looking into the burn pot with a flashlight, insert a 1/8" drill bit, toothpick, or similar diameter tool into the holes, clearing each blocked hole.

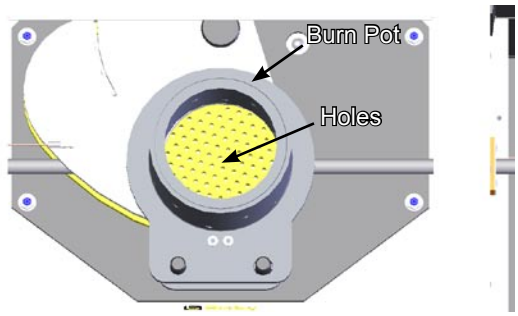

FIGURE 32

CLEANING THE AIR FILTER FOR THE IGNITION AIR COMPRESSOR (YEARLY)

The air filter for the air compressor will only need to be cleaned if the UBB is installed in a dusty environment. Inspect the air filter annually. If it appears dirty, remove and clean with a mild detergent and water. Once dry, replace.

REPLACING THE UBB AIR FILTER (2-3 MONTHS)

The air filter for the UBB is located in the back of the UBB. The filter should be checked monthly and replaced every 2 to 3 months depending on usage. A clogged filter will reduce the efficiency of the UBB. The filter can be replaced with most 16" x 16" x 1" filters, or if not available, 20" x 16" x 1" filters. Do not run the UBB without the filter in place as its primary function is to keep dust and dirt out of the mechanical components in the UBB.

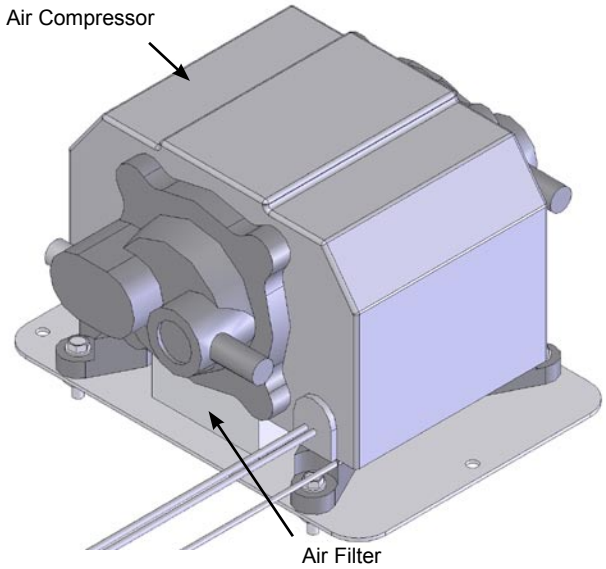

FIGURE 33

FLASHING INDICATOR LIGHT SYSTEM

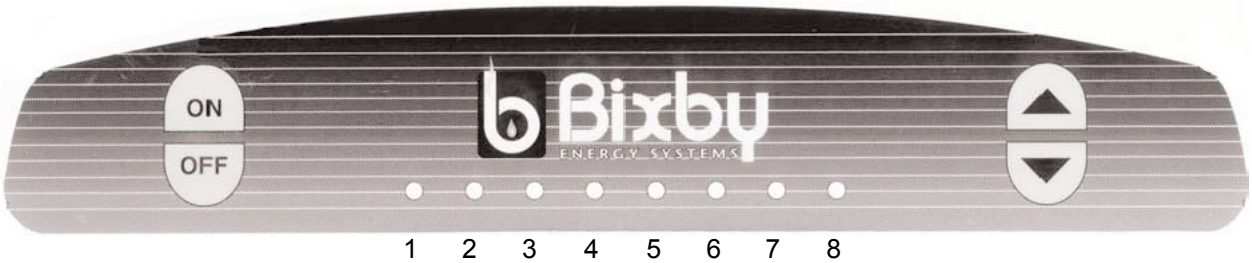

The 8 heat level indicator lights on the UBB are also designed to act as potential problem indicators. Whenever one or more of these lights begins to flash, consult the table below and the Trouble Shooting Procedures for reason and recommended solution.

Light #1	Power failure during UBB operation: Push the "Off" button and then the "On" button to restart.
Light #2	Operating temperature not reached (Exhaust temperature too low for heat setting): Push the "Off" button and then the "On" button to restart. Verify fuel level in the hopper.
Light #3	Exhaust system or hopper area is overheating. Reduce the feed rate (see Troubleshooting section). If problem continues, contact your Bixby Energy dealer.
Light #4	UBB firebox door is ajar (open). Make sure the door is tightly closed. If the door is open for more than one minute, the UBB will shut down. Contact your Bixby Energy dealer if problem continues.
Light #5	Ash Drawer is ajar (open): Make sure the ash drawer is tightly closed. The UBB will start only when the ash drawer is closed. If the ash drawer is open for more than 20 minutes, the UBB will shut down. Close ash drawer and restart the UBB.
Light #6	Exhaust fan failure. Contact your Bixby Energy dealer for service.
Light #7	Fire pot mechanical malfunction: Push the "Off" button and then the "On" button to restart. If malfunction continues, clear jam in burn pot once the firepot has cooled.
Light #8	Feeder wheel failure. Open hopper lid, remove feeder wheel cover, clear jam and restart UBB. If this continues, contact your Bixby Energy dealer for service.
Light #1 & 6	Convection Fan failure - no current detected during startup. Shutdown stove, unplug stove, verify wiring connections, and restart. If problem persists, contact your Bixby Energy dealer for service.
Light #1 & 7	Left igniter failed. Contact your Bixby Energy dealer for service. The UBB will continue to operate, but will take longer to ignite.
L**ight #2 & 3**	Lean recovery mode. This is normal during operation. Increase feed rate slightly if desired. If stove has shutdown, the hopper may be empty or a potential blocked flue warning. Check hopper for fuel. If fuel is present, flue (exhaust) may be blocked. Clean the exhaust portion of the UBB and the attached venting. See Maintenance and Cleaning Procedures for details. If problem continues, contact your Bixby Energy dealer.
Light #2 & 6	Air Pump failure - no current detected during startup. Shutdown stove, unplug stove, verify wiring connections, and restart. If problem persists, contact your Bixby Energy dealer.
Light #2 & 7	Right igniter failed. See Light #1 & 7 above.
Light #2 & 8	Hopper door open. Make sure the door is closed. When the door is open, the fuel delivery system is turned off for safety. The UBB will shut down if the door is left open.
Light #1,2 & 7	Left & right igniters have failed and the UBB will not be able to autostart. See Startup section for manual ignition instructions. Contact your Bixby Energy dealer for parts and service.
Light #1-3, &7	Internal error - possible ignitor electrical fault - unplug UBB and contact your Bixby Energy Dealer for service.
Flashing Lights	Thermostat Mode or High Temperature Pull-back. The stove will automatically reduce the feed rate if the exhaust temperature is too high. Contact your Bixby Energy Dealer if stove is consistently overheating.

TROUBLESHOOTING PROCEDURES

When experiencing a problem, please read through the following list to determine which item most closely approximates the trouble you are encountering. This will reduce troubleshooting time and effort.

CAUTION: **ALWAYS BE SURE TO UNPLUG THE UBB ELECTRICAL CONNECTION BEFORE ANY SERVICE PROCEDURES ARE PERFORMED.**

NOTE: When contacting your dealer for service, verify the serial number (located on the left side of the hopper) has been recorded on page 1 and have this manual with you.

NOTE: Many performance issues can be solved through cleaning (stove and venting), proper venting installation, or the use of the trim pot knobs located near the control board behind the left side panel. Manual adjustment of either the fuel feed rate or the exhaust fan speed may be necessary with different fuels (change in moisture content for example), different seasons (change in outside air temperature), or other changes in the operating conditions. Read through the troubleshooting chart below to determine which knob to adjust and in which direction.

NOTE: Any changes made to the stove operation using the trim pot knobs will not be immediately apparent. Therefore it is important to wait at least 30 minutes between adjustments to allow the operation to stabilize.

PROBLEM	POSSIBLE CAUSE/REMEDY
No response when UBB is plugged in.	Check the 120 volt power supply circuit for adequate voltage. Check fuse on circuit board and replace with a direct replacement if necessary. (Figure 34)
No fire or fuel in burn pot.	Check to assure that there is fuel in the hopper. Verify feeder wheel is turning. (See error codes). Check to assure that the fuel feeder tube is not blocked by fines (small pieces of fuel) or "bridging" of fuel pellets or kernels. Push the "Off" button and then the "On" button to attempt a new startup. Door or ash drawer is ajar. (See error codes).
Flame goes from high to low to high.	Feed rate is low, turn the feed rate up (+) 1 notch using the Fuel trim pot knob and observe. Repeat if necessary. See Control Board Trim Pot Panel section.
Smoke from convection air outlet (louvers) or hopper.	Some wisps of smoke may occur during startup. This is normal. Check for debris under the feeder wheel. If the smoke doesn't clear within 15 minutes or if excessive immediately shut down unit, ventilate the area and contact your dealer.
Unburned fuel in ash drawer.	A small amount is normal. During start up, the burner pot is emptied and as a result, unburned fuel left in the pot will be dumped. Excessive amounts is likely due to fire going out due to either too much fuel (smothering the fire) or too much air (burning too fast). Observe UBB, if pot begins to fill with fuel, turn fuel down (-). If fuel is burning too fast, turn air down (-). Hopper may have run out of fuel causing the fire to go out.
Ash dump stalling while cycling.	Burn may be too hot. Feed rate / fan speed may need adjustment - turn fan speed down or feed rate up 1 notch and observe. Repeat if necessary. See Control Board Trim Pot Panel section.

TROUBLESHOOTING CONT.

PROBLEM	POSSIBLE CAUSE/REMEDY
Fire fails to start.	Be sure enough fuel is in the burn pot. Fuel should cover the bottom to a level of approximately 1/2". Check bottom of burn pot for built-up ash or deposits and remove. Check for flashing light #6, exhaust fan failure (contact your dealer). Push the "Off" button on the control panel. Wait three minutes and push the "On" button to attempt a new startup. NOTE: When the UBB is cold (below normal room temperature), a "second start" may be required. This is normal and a result of needing to pre-heat the burn pot. Check the igniter fuses located on the control board. (See error codes). Verify air pump is working during start up (feel pump for vibration). Verify minimum of 110 volts is available during startup. Inspect UBB and venting to see if cleaning is needed.
Fire starts but shuts down after approximately 12 minutes (#2 indicator light).	Check feeder chute to be sure fuel is feeding. Check to make sure exhaust thermocouple wire has not been disconnected from the control board. (Two wire connection, upper right hand side). If feeder wheel stops after 12 minutes, electronics may be faulty; contact your dealer for service.
Dark yellow and or lazy flame, slow start-up or excessive smoke present.	Check for spent fuel or too much fuel clogging bottom of burn pot. Burn pot, lower paddle holes may require cleaning. Heat exchanger tubes may require cleaning. Check vent pipe for blockage of exhaust gasses and incoming combustion air. Verify vent pipe connections for exhaust leak between intake and exhaust Feed rate / fan speed may need adjustment - turn fan speed up or feed rate down 1 notch and observe. Repeat if necessary. See Control Board Trim Pot Panel section.
Excessive volume of fire, build-up of ash and dirty glass.	Burn pot may require cleaning. The venting system or heat exchanger may need to be cleaned.
Burn pot filling with fuel.	UBB may not be level. Feed rate / fan speed may need adjustment - turn fan speed up or feed rate down 1 notch and observe. Repeat if necessary. See Control Board Trim Pot Panel section. Verify that the exhaust is not obstructed. See Maintenance and Cleaning instructions - Cleaning Heat Exchanger Tubes. In addition, the vent pipe may need to be cleaned. Holes in burn pots and lower burn paddle may need to be cleaned. Check the alignment of the burn pot components. Check the installation of the plates covering the heat exchanger tubes. Press the "ON" button to perform manual ash dump.

TROUBLESHOOTING CONT.

PROBLEM	POSSIBLE CAUSE/REMEDY
Burn drive motor does not operate.	Confirm firebox door is closed and door switch is fully engaged. Confirm ash drawer is closed and drawer switch is fully engaged. Confirm the brake on the motor disengages. Confirm all wiring connections. If motor has failed, replace motor.
Air pump does not operate.	Confirm power and ground wiring connections. If pump has failed, replace pump.
Feeder wheel does not operate.	Confirm hopper door is closed and switch is fully engages. Remove feed wheel access plate and confirm wheel is free from obstruction. Confirm wiring connections, including the feed wheel sensor and hopper snap disc (normally closed).
Igniter failure.	Confirm igniters are plugged in. Confirm igniter fuse has not blown. Check igniter resistance using an ohm meter (acceptable range 22-30 ohms). If igniter has failed, replace igniter.
Exhaust fan does not operate.	Confirm exhaust fan connections. Confirm exhaust fan sensor connections. Confirm exhaust fan sensor placement. It should be close to the fan blades, but not touching.
Convection fan does not operate.	Confirm the thermocouple is connected. Confirm capacitor is connected. Confirm wiring connections.

THIS PAGE INTENTIONALLY LEFT BLANK

SERVICE PARTS LIST

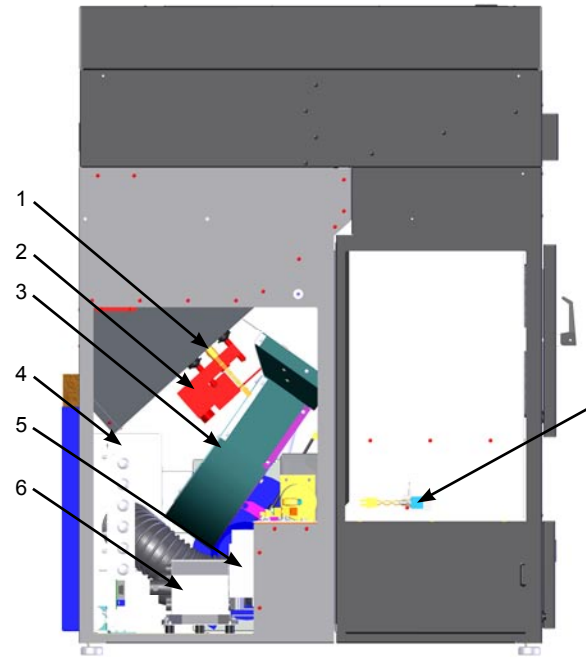

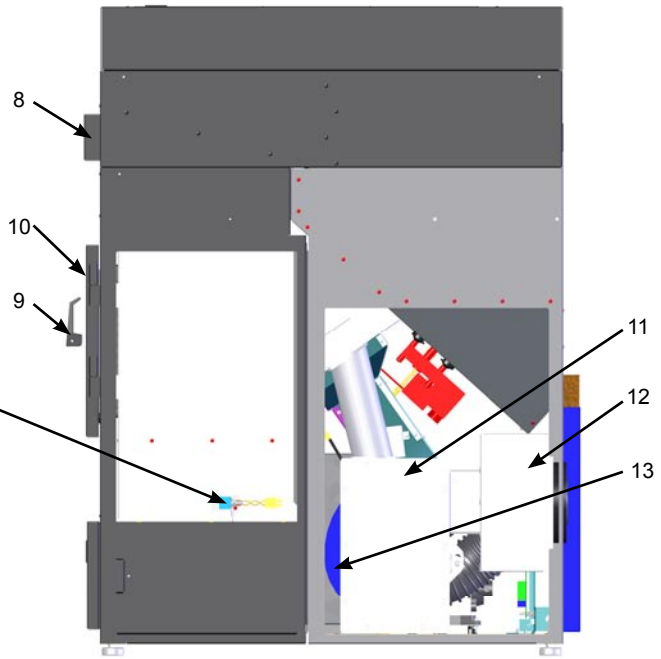

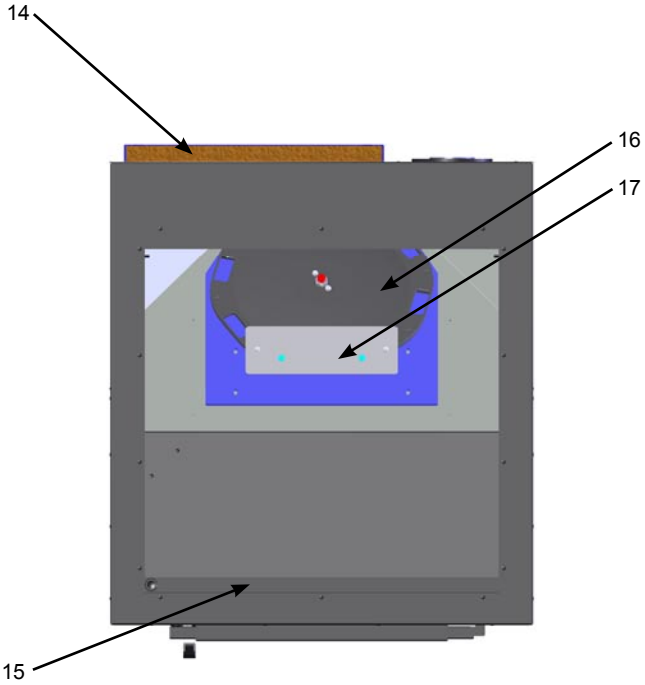

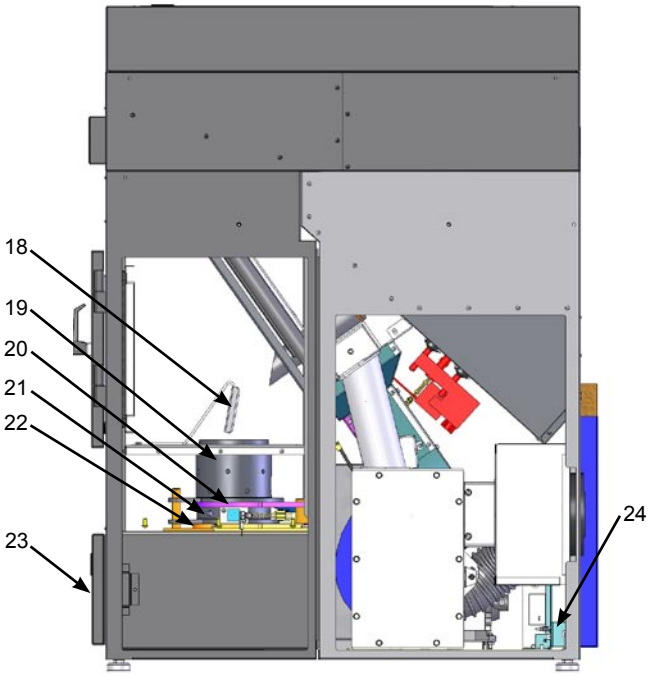

ITEM NUMBER	DESCRIPTION
1	SENSOR, FEEDER WHEEL
2	MOTOR, FEEDER WHEEL
3	CONVECTION FAN ASSEMBLY
4	CONTROL BOARD TRIM POT PANEL
5	MOTOR, BURN DRIVE
6	AIR PUMP
7	IGNITORS, 500 W
8	CONTROL PANEL - MEMBRANE SWITCH
9	DOOR LATCH, PULL AND TURN
10	FIREBOX DOOR
11	EXHAUST FAN BOX
12	CONVERTER BOX
13	EXHAUST FAN
14	AIR FILTER
15	HOPPER DOOR SWITCH
16	FEED WHEEL, 14 INCH
17	FEED WHEEL ACCESS PANEL
18	FUEL DEFLECTOR
19	UPPER BURN POT
20	UPPER BURN PADDLE
21	LOWER BURN POT
22	LOWER BURN PADDLE
23	ASH DRAWER
24	CAPACITOR, CONVECTION FAN

OPTIONAL ACCESSORIES

Item Number	Description
4001418	Accessory, Hopper Extension
2013332	Accessory, Vacuum Attachments

WIRING DIAGRAM

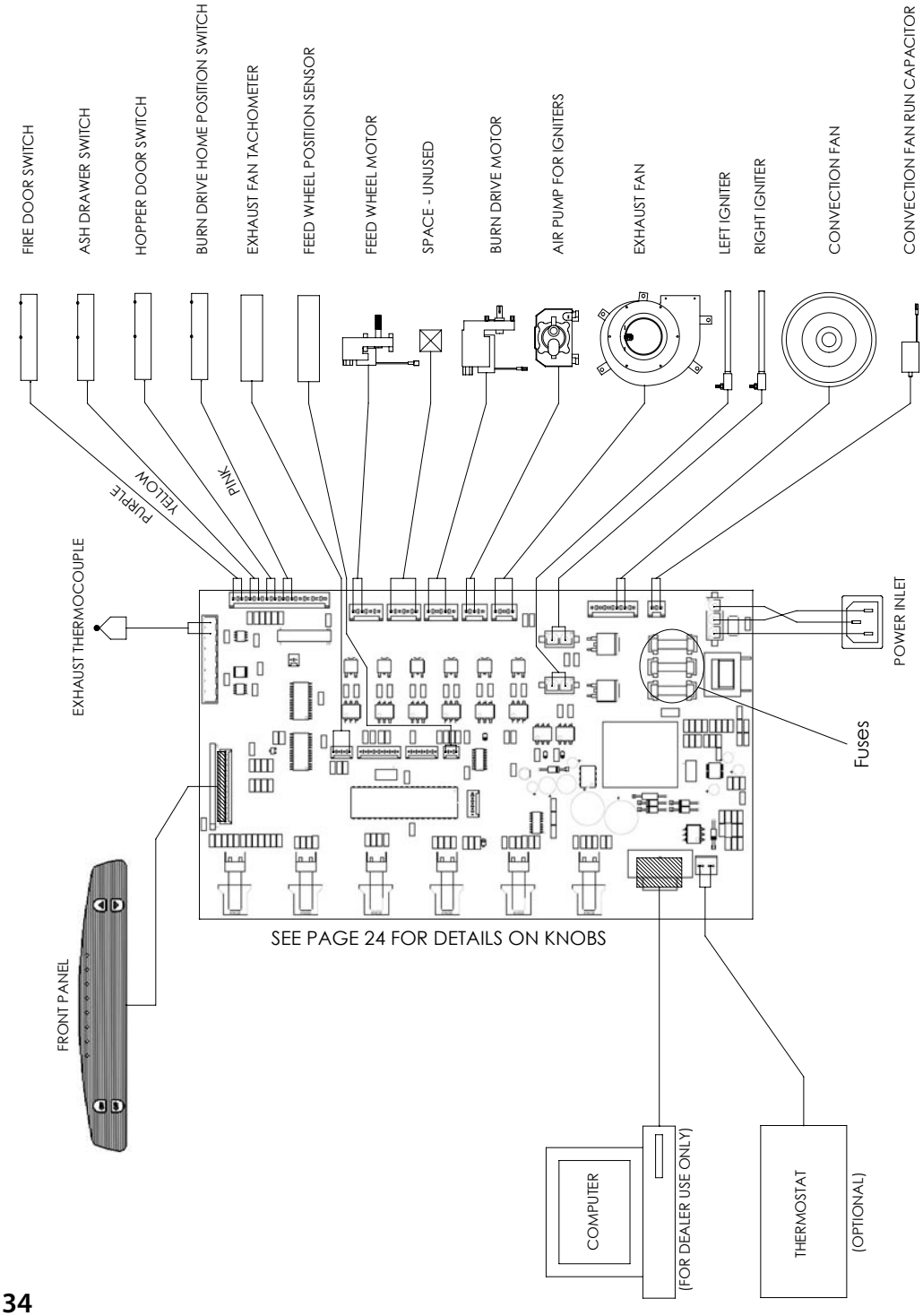

FIGURE 34

VENTING PARTS LIST

Description	Color / Size	Part #	
Termination Cap	Stainless	5002506	
Wall Thimble	Aluminized Steel	5000526	
Horizontal Flashing Kit	Stainless Steel	5001037	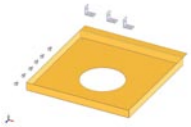
Decorative Collar	Black	5000740	
Starter Collar	Black	5000691	
Storm Collar	Stainless Steel/Galvanized	5000534	
Roof Flashing	0/12 – 6/12 6/12 - 12/12	5000542 5000550	
Wall Strap	Galvanized Steel	5000568	
Firestop Support – Flat	Galvanized Steel	5000584	
Firestop Support Cathedral Ceiling	Black	5000592	
Trim Ring	Black	5000641	

MAINTENANCE LOG

Date	Service Performed	Notes